SERVICING MANUAL

Model 673

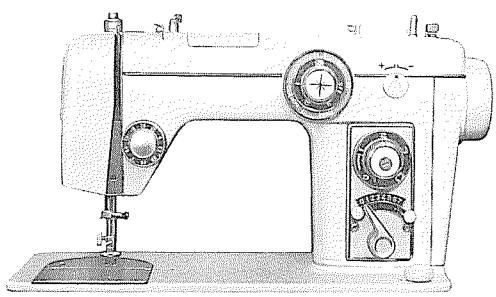

ADJUSTING OF THE DEFLECTION OF THE STRAIGHT MOVEMENT OF THE NEEDLE

If there exists the deflection in the straight movement of the needle, it results in the right and left ward movement of the needle bar even if the essential cam being set and the zigzag width regulating lever being set at "O" position.

To make an adjustment:

1. Remove the essential cam, and set the buttonhole dial at "S" positior and the basic line controlling dial at "L" position.
2. Set thezigzag width regulating lever at "O" position.
3. Shifting the claw right and left while holding the same with fingers,
4. in order to ensure the deflection of the needle at minimum.
5. Loosen the set screws for the zigzag width regulating lever stopper.
6. Adjust the located position of the zigzag width regulating lever stopper while moving the stopper slightly right and left.
7. Secure the zigzag width regulating lever stopper with the set screws.

Remarks:

* The deflection of the needle should be determined below 0.04mm. with the use of a dial gauge. If the gauge is not at hand, it is proposed to make an adjustment in order that substantially no deflection can be observed in the straight movement of the needle.
* Maximum zigzag width may be determined according to the adjustment of the straight movement.

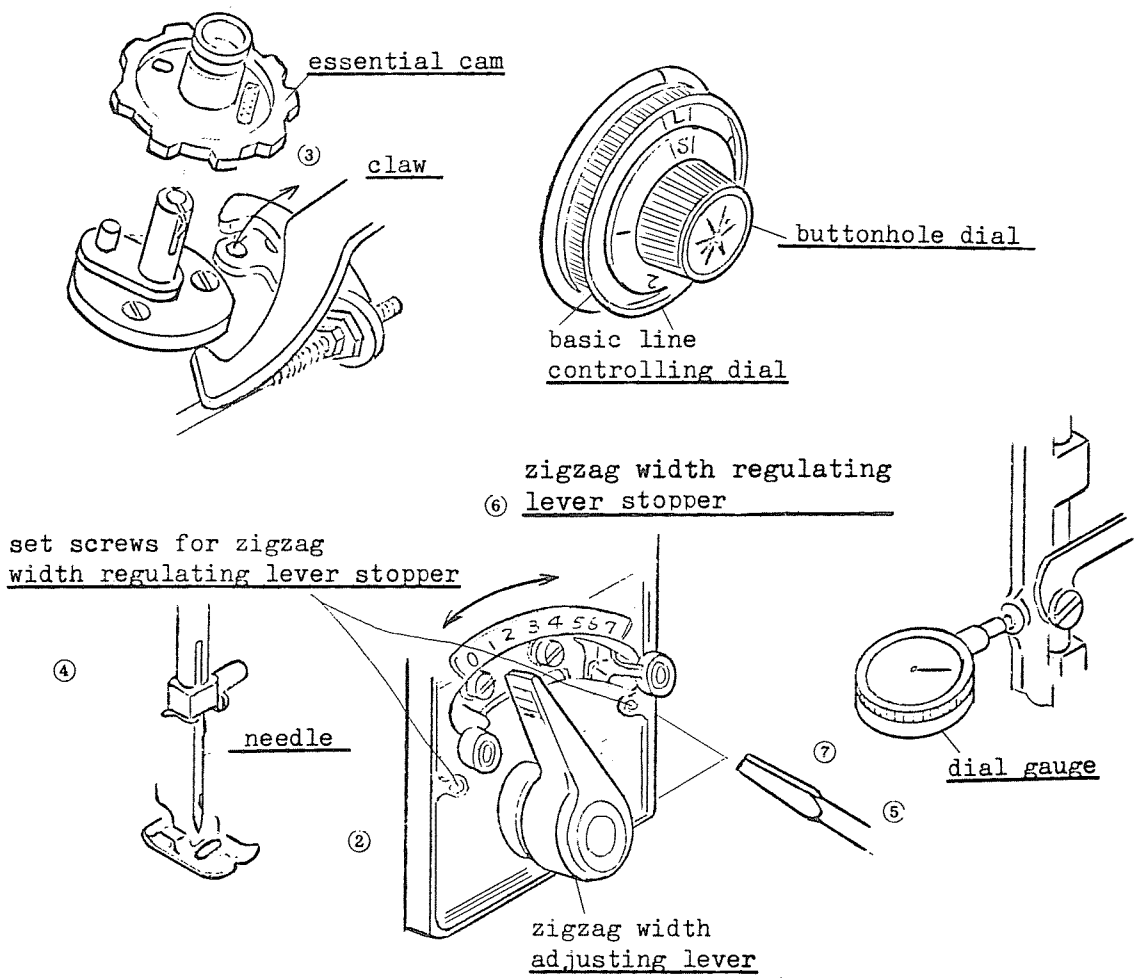

ADJUSTMENT OF THE DEFLECTION OF THE LEFT SIDE BASIC LINE

If the drops of the needle on the left side may not be aligned when the basic line controlling dial is set at "L" and manual pattarn sewing (with zigzag width "0-7-0") is employed, there may exist the deflection of the left side basic line.

To make an adjustment:

1. Set the button hole dial at "S" position and the basic line controlling dial at "L" position.
2. Turn the hand wheel in order to make the claw about against the tooth of the essential cam.
3. Checking the direction of the needle deflection while changing the zigzag width regulating lever between the graduation "0" and "7",
4. Loosen the nut (with the use of 6 mm. and 9 mm. spanners),
5. Turn the disc toward you (with 9 mm. spanner) when the needle deflects rightward, and/or
6. Turn the disc in the reverse direction when the needle deflects left, and then secure the nuts (with the use of 6 mm. and 9 mm. spanners) in order to enable the needle to deflect 0.15 mm. leftward.

   * When the needle is adjusted to deflect slightly leftward from the basic line with the zigzag width set at maximum, fabric is pulled with the thread, so that the basic line may be formed straight.

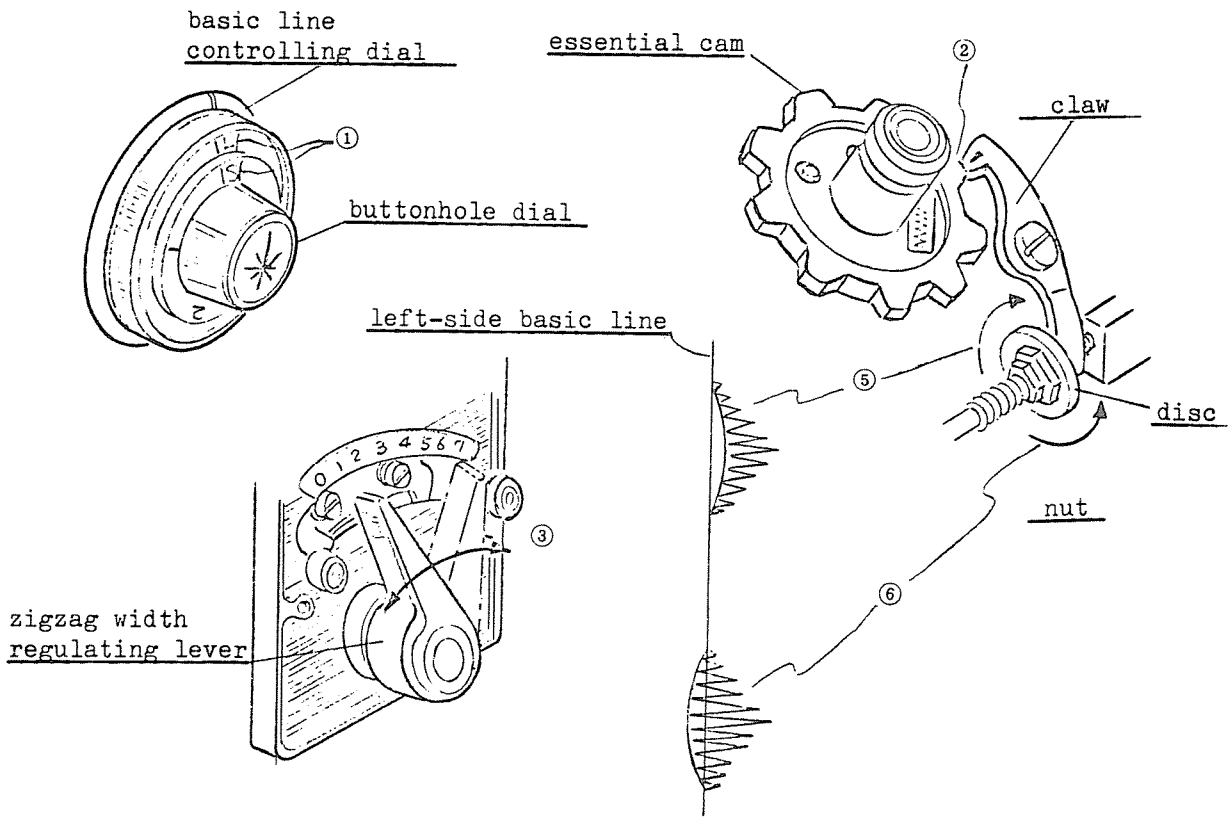

ADJUSTMENT OF THE DEFLECTION OF THE RIGHT SIDE BASIC LINE

If the drops of the needle on the right side is not aligned when the basic line contrlling dial is set at "R" and the mannual pattarn sewing is employed, there may exist the deflection of the right side basic line

To make an adjustment:

1. Set the buttonhole dial at "S" position and the basic line controlling dial at "R" position, respectively.
2. Turn the hand wheel in order to make the claw about against the root of the essential cam.
3. Check the direction of the needle deflection while changing the zigzag width regulating lever between graduation "0" and "7".
4. Loosen the nuts (with the use of 6 mm. and 9 mm. spanners).
5. When the needle deflects left, turn the disc in the reverse direction (with 9 mm spanner).
6. When the needle deflects right, turn the disc toward you, and secure the nuts (with 6 mm. and 9 mm spanners) in such a manner that the needle may deflects 0.15 mm. rightward.

   * If the needle is adjusted in such a manner that the needle may deflect slightly right ward from the basic line with the zigzag width set at maximum, fabric is pulled with the thread, it enables the basic line to be formed straight.

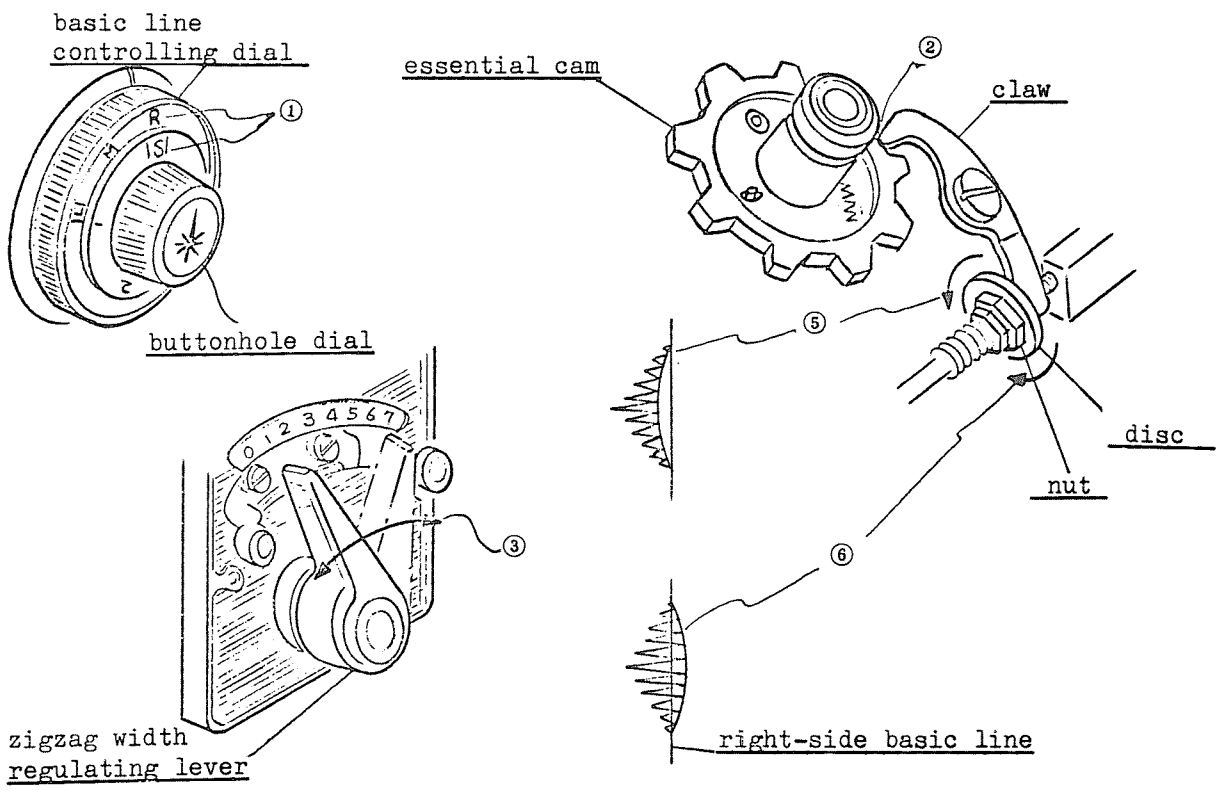

ADJUSTMENT OF THE NEEDLE DEVIATION

When the zigzag width is set at maximum and the hand wheel is turned, and if, the up and down movement of the needle between the upper surface of the needle plate and the lower dead point of the needle bar is deteriorated not perpendicular to the needle plate surface, there exists so-called "the needle deviation" or "the deviation of the needle". In this case, the deviation of the needle in the upward movement is called "out flow deviation", and in the downward movement, "in flow deviation".

To make an adjustment:

1. Insert the essential cam, and set the button hole dial at "S" position, the basic line controlling dial at "L" and zigzag width regulating lever at "7", respectively.
2. Turn the hand wheel slowly, and make an adjustment in order to have the out flow deviation of the needle begin at the position 2 to 3 mm. above the upper surface of the needle plate.
3. When the out flow deviation begins at lower position,
   * Loosen the screws securing the upper shaft gear and turn the hand wheel slightly toward you (thereby turning the upper shaft) while keeping the upper shaft gear in position not to rotate by holding the one of the screws with a screw driver.
   * Temporarily secure one of the screws and check if the deviation is corrected, and then secure the screw after completion of the adjustment.
   * When the out flow deviation occurs high above the needle plate, similar adjustment is applicable except for the direction of the rotation of the hand wheel. In this case, the hand wheel should be turned in the reverse direction.

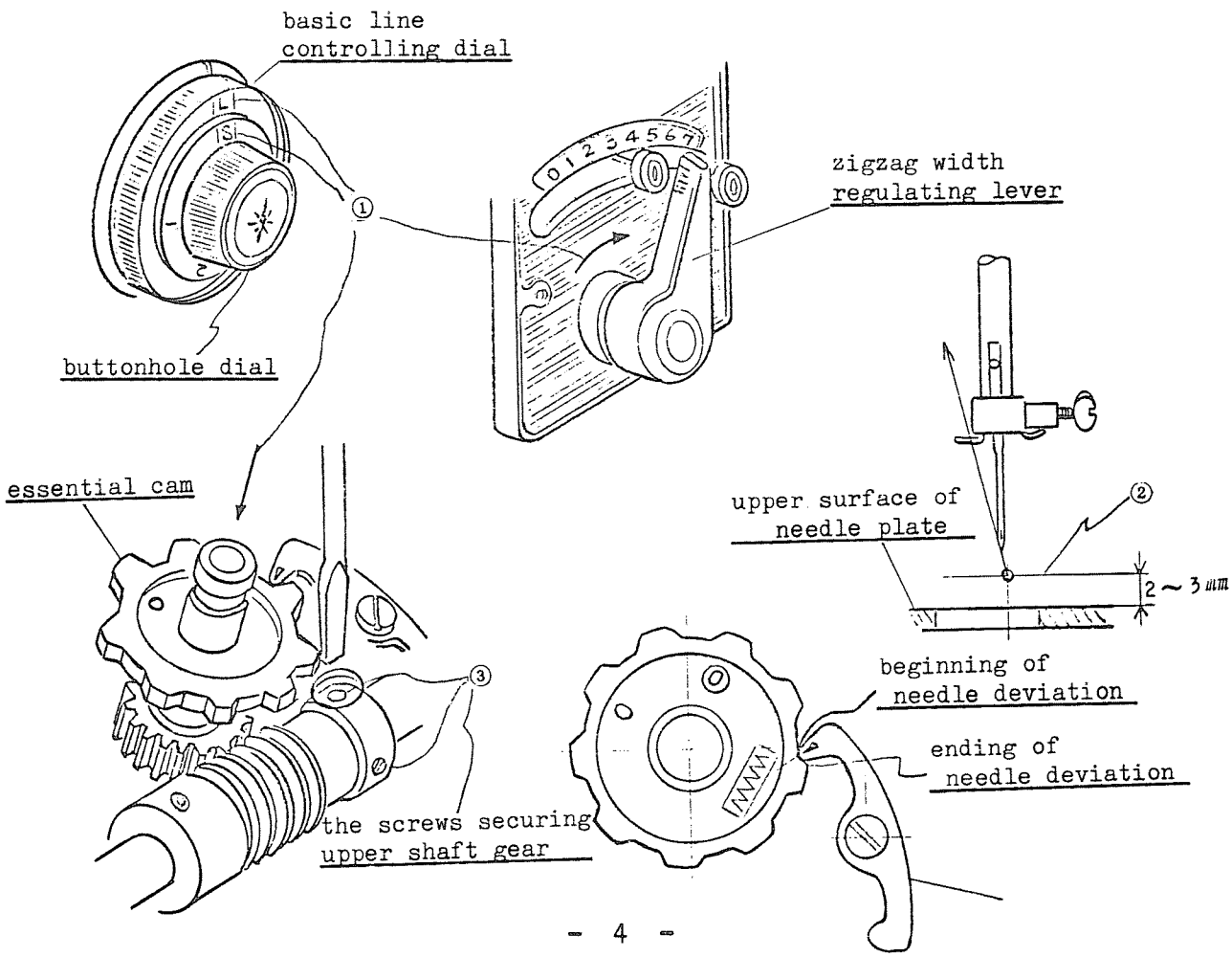

ADJUSTMENT OF THE DROPPING DEPTH OF THE NEEDLE

The dropping depth of the needle means the distance from the upper portion of the eye of the needle to the tip of the shuttle hook in such a position that the needle bar ascends from its lower dead point and then the tip of the shuttle hook contacts with the side portion of the needle at first time while the hand wheel is turned toward you (namely in the normal direction).

To make an adjustment:

1. Set the button hole dial at "S" position and the basic line controlling dial at "L" position.
2. Set the zigzag width regulating lever at "0" position.
3. Turn the hand wheel in the normal direction to make the tip of the shuttle hook contact with the side portion of the needle.
4. Loosen the screw securing the needle bar retainer.
5. Adjust the dropping depth of the needle within the range between 3.1 ± 0.3 mm. while shifting the needle bar.
6. Tighten the screw securing the needle bar retainer.

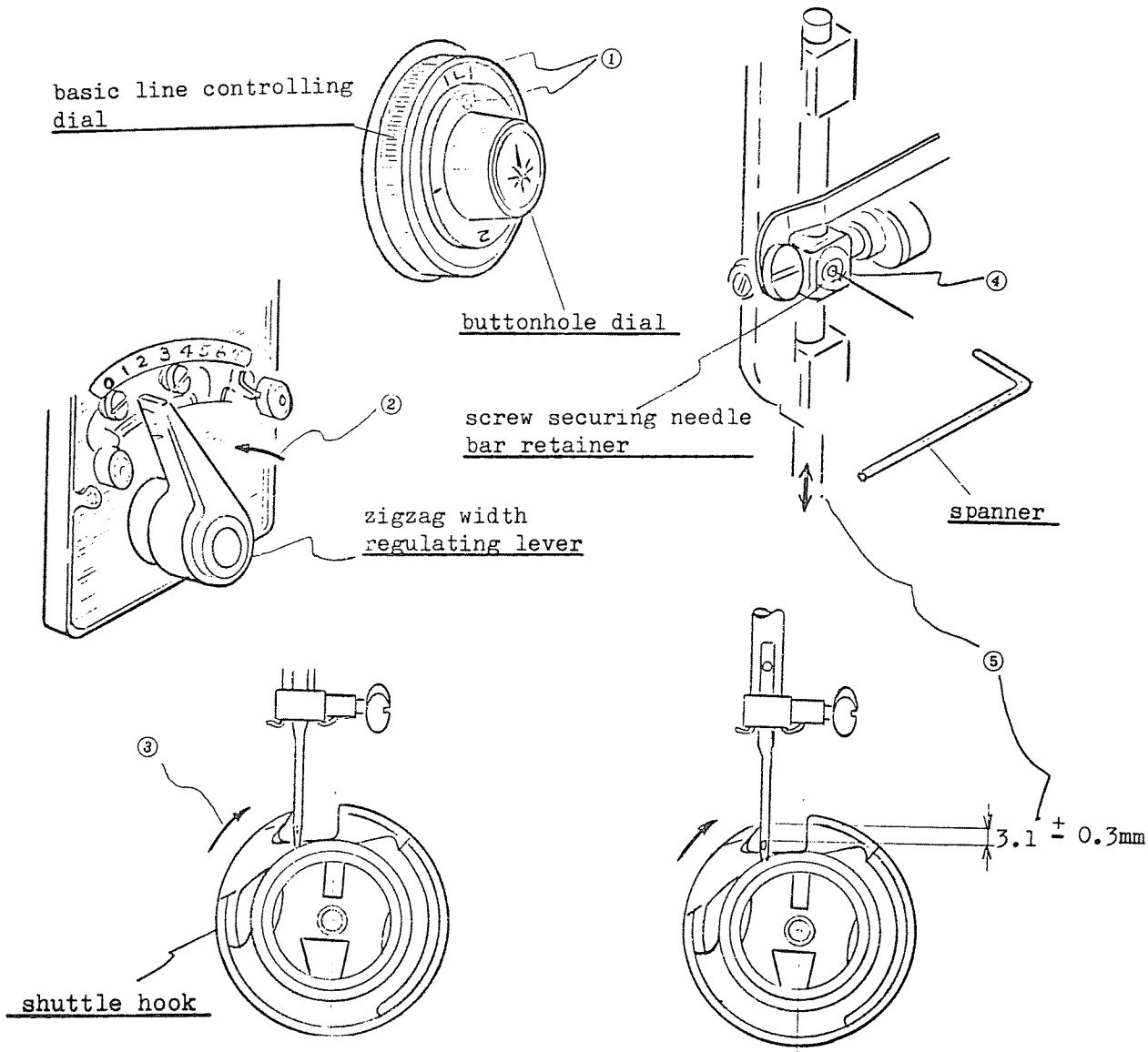

ADJUSTMENT OF THE DISPLACEMENT DEGREE OF THE NEEDLE

The displacement degree of the needle means the movement of the needle bar from the its lower dead point to the position such that the tip of the shuttle hook contracts with the side portion of the needle when the zigzag width regulating lever is set at "O" and the basic line regulating dial at "L" position. The standard is within a range between 1.8± 0.2mm.

1. Set the zigzag width regulating lever at "O" and the basic line regulating dial at "L" position.
2. Turn the hand wheel forward you (namely in the normal direction) until the needle bar reaches at its lower dead point.
3. Loosen the (two) securing screws for the upper shaft adjusting wheel.
4. Set the needle bar in the position 1.8±0.2mm. above its lower dead point while turning the hand wheel forward you and keeping the upper shaft controlling wheel in position without rotation by holding the screw with a screw driver.
5. Holding the hand wheel in order to prevent the rotation of the upper shaft, move the upper shaft adjusting wheel with the screw driver in such a manner that the tip of the shuttle hook contracts with the side portion of the needle.
6. Tighten the (two) screws to secure the upper shaft adjusting wheel.

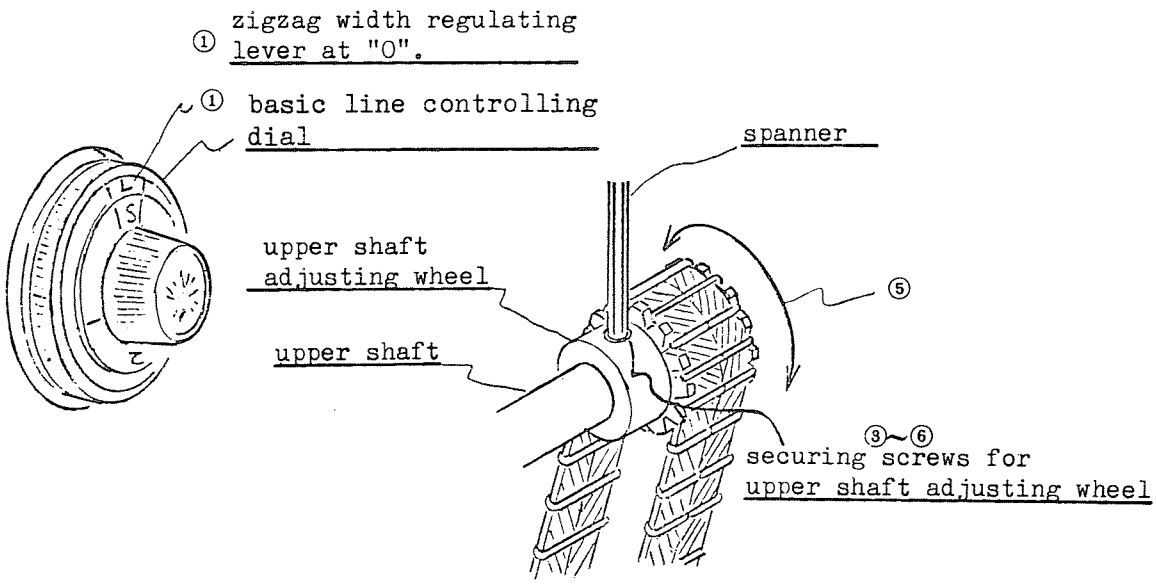

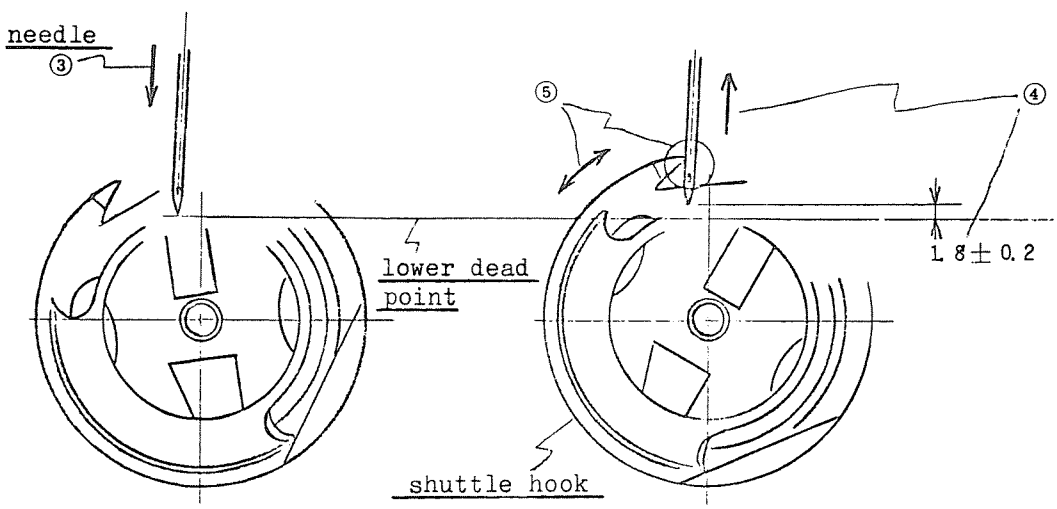

ADJUSTMENT OF CLEARANCE BETWEEN NEEDLE AND HOOK

The standard of the clearance between needle and hook is within a range between 0 to 0.15 mm.

1. Loosen the set screw for the lower shaft bushing, and pull the lower shaft gear in the direction designated by an arrow.
2. Loosen the (three) race base set screws.
3. Adjust the clearance between the needle and the hook while shifting the hook unit forward and backward.
   The clearance should be satisfactory in each of the basic lines (L,M,R).
4. Secure the (three) race base set screws.
5. Make an adjustment in the engagement between the lower shaft gear and its counter gear (namely the gear located in the driver portion).
6. Tighten the lower shaft bushing set screw in a manner such that the end surface of the lower shaft bushing slightly abut against the end surface of the lower shaft gear.

* Remarks:

Check the engagemant between the lower shaft gear and its counter part while turning the upper shaft after the completion of the adjustment in order to prevent the too rigid engagement between.

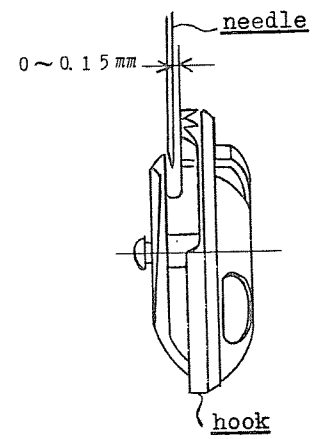

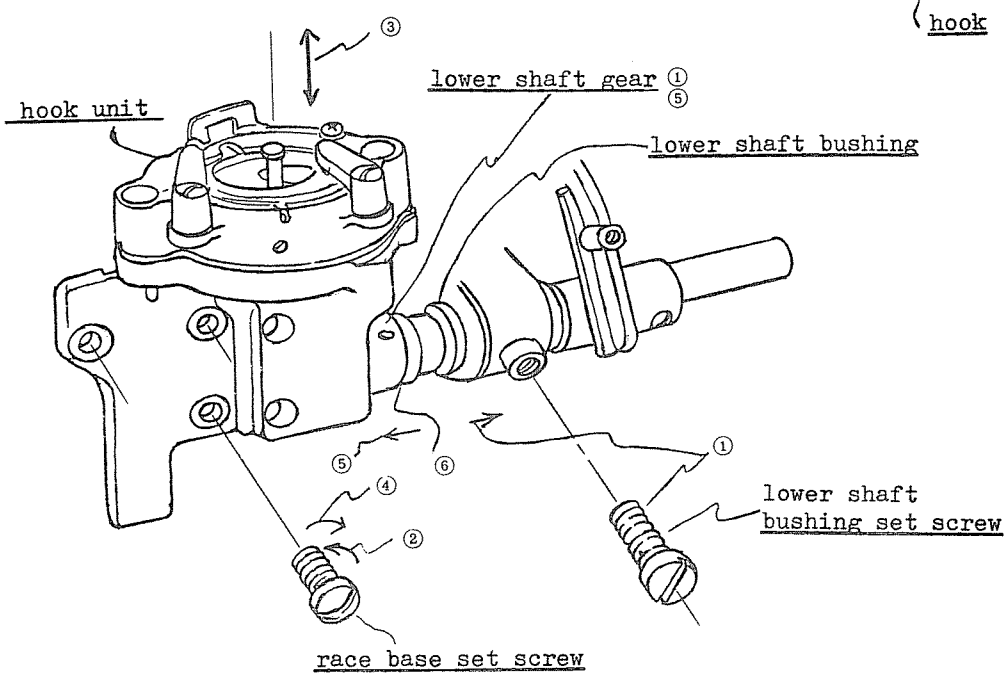

POSITIONING OF THE CENTRE BASIC LINE

In the case when the zigzag sewing width (between the basic line "L" and the basic line "R") is set 6.8 to 7.0 mm., the adjustment should be made according to the standard in order to make the drops of the needle at the centre basic line placed on the middle portion thereof and to ensure the difference between the width of the right and left portion of the zigzag sewing stitches within 0.4 mm.

Adjustment of the position of the centre basic line is as follows:

1. Set the zigzag width regulating lever and the drop feed knob both at "O" position.
2. Place a sheet of paper under the presser foot.
3. Set the buttonhole knob at "S" position, and check the drops of the needle each at the basic lines "L", "M" and "R" while turning the hand wheel.
4. Loosen the set screw for the twin needle sewing restricting cam.
5. Adjust the drops of the needle at the centre basic line "M" while slightly turning (a pair of) twin needle sewing restricting cam.

   * The drops of the needle at the basic line "M" tend to gather near at the basic line "L" when (a pair of) twin needle sewing restricting cam are turned in the direction toward the hand wheel.
   * The drops of the needle at the basic line "M" tend to gather near at the basic line "R" when (a pair of) twin needle sewing restricting cam are turned in the direction toward the face plate.
   * Tighten the screw for the twin sewing restricting cams after the completion of the adjustment.

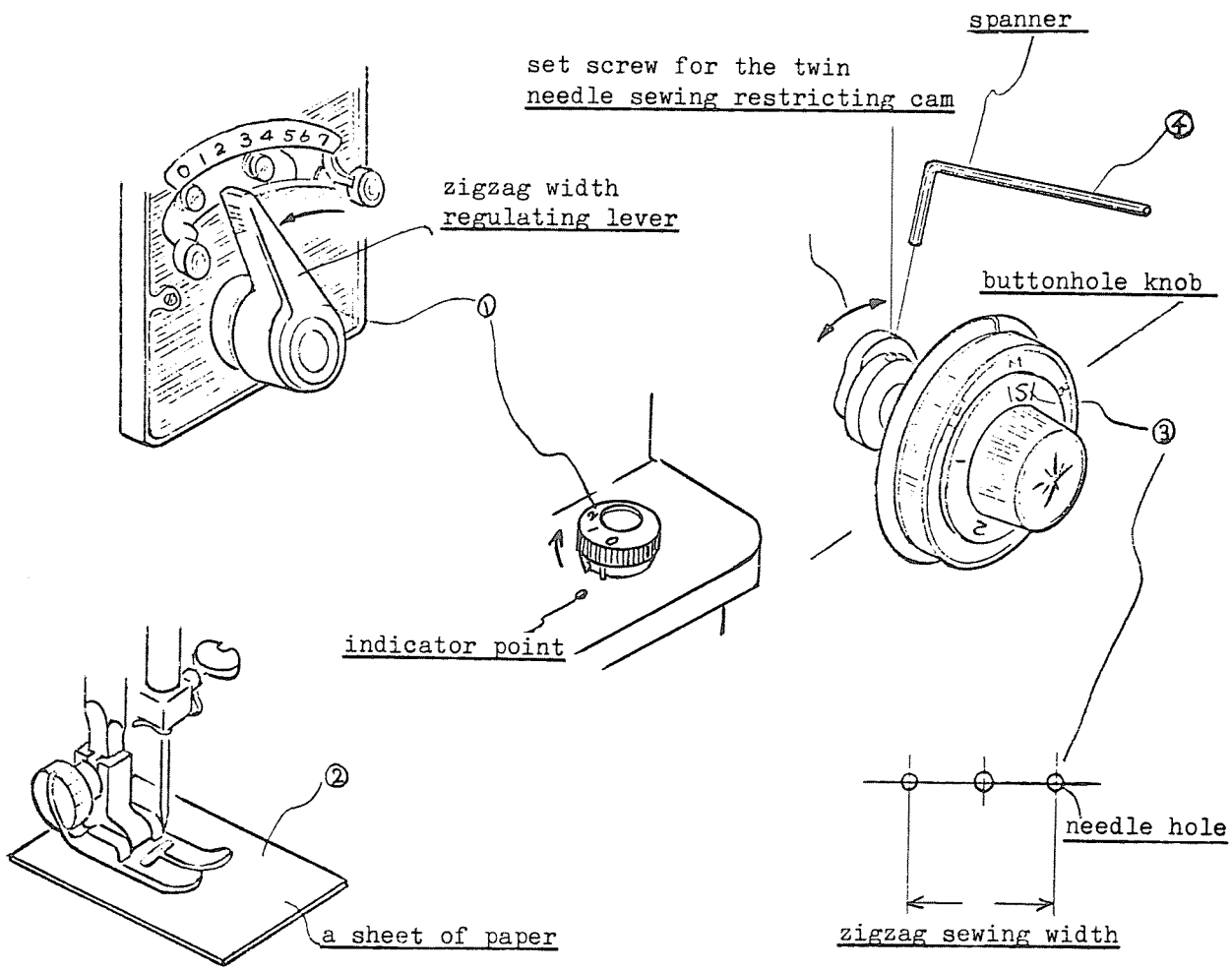

ADJUSTMENT OF "STRAIGHT" (1)

This apparatus is designed to make the drops of the needle formed in the centre position (substantially same as on the basic line "M") and the zigzag width "O" automatically subsequent to the setting of the basic line controlling dial at "STRAIGHT" position. This apparatus also enables the needle hole to be small.

* The standard of the deflection of the needle is below 0.04 mm.

A. When the deflection of the needle is too large:

1. Set the basic line controlling dial at "STRAIGHT" position.
2. Contact the claw with the tooth of the essential cam "O".
3. Loosen the set screw for the claw open rod.
4. Loosen the set screw for the twin needle sewing controlling claw.
5. Keeping the tip of the twin needle sewing controlling claw abutting against the twin needle sewing restricting cam, adjust the deflection of the needle according to the standard while shifting the twin needle sewing restricting lever and the twin needle sewing controlling claw in the directions designated by two arrows, in each case when the zigzag width regulating lever is set at each graduation between 0 to 7.
6. Tighten the set screw for the twin needle sewing controlling claw.
7. Slightly slide the claw open rod "2" in order to provide between the claw and the tooth of the essential cam with the clearance of 0.1 to 0.4 mm.
8. Tighten the set screw to secure the claw open rod.

Remarks: Check the reverse function at each setting of the feed controlling dial at each graduation after the completion of the adjustment. The restriction of the two needle sewing can be determined automatically subsequent to the completion of the adjustment of the "STRAIGHT", so that there would be required no further adjustment.

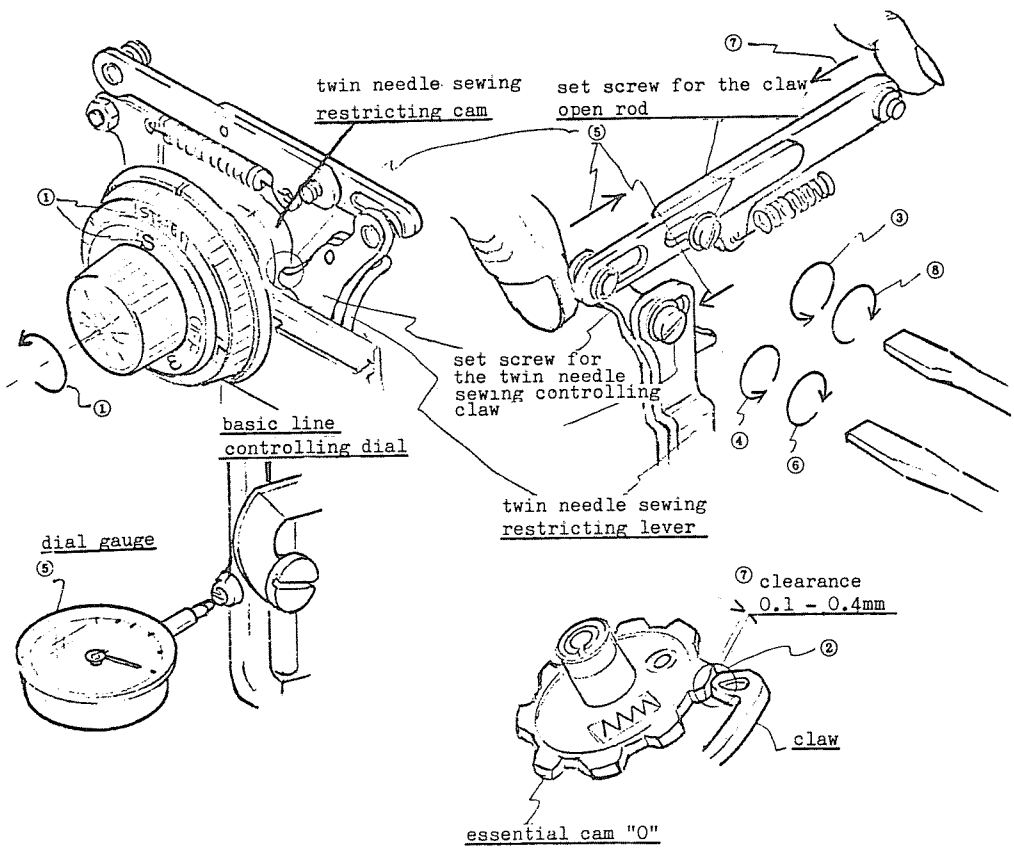

ADJUSTMENT OF "STRAIGHT" (2)

* When auxiliary needle plate is not in close contact relation with needle hole for zigzag sewing

1. Set basic line controlling dial at "STRAIGHT" position.
2. Loosen the set screw for the needle plate drive arm controlling plate.
3. Loosen the screw for the drive arm stopper.
4. Adjust the needle plate drive arm in such a manner that the auxiliary needle plate becomes into the close contact relation with the needle hole for zigzag sewing, keeping the tip of the claw of the needle plate drive arm slightly abutting against the needle plate lever.
5. Tighten the set screw for the needle plate drive arm controlling plate.
6. Then, set the basic line controlling dial at "TWIN" position.
7. Adjust the located position of the drive arm stopper in order to make the auxiliary needle plate free from the needle hole for zigzag sewing and to provide between the auxiliary needle plate and the needle hole for zigzag width with clearance of 0 to 0.2 mm.
8. Secure the screw for the drive arm stopper.

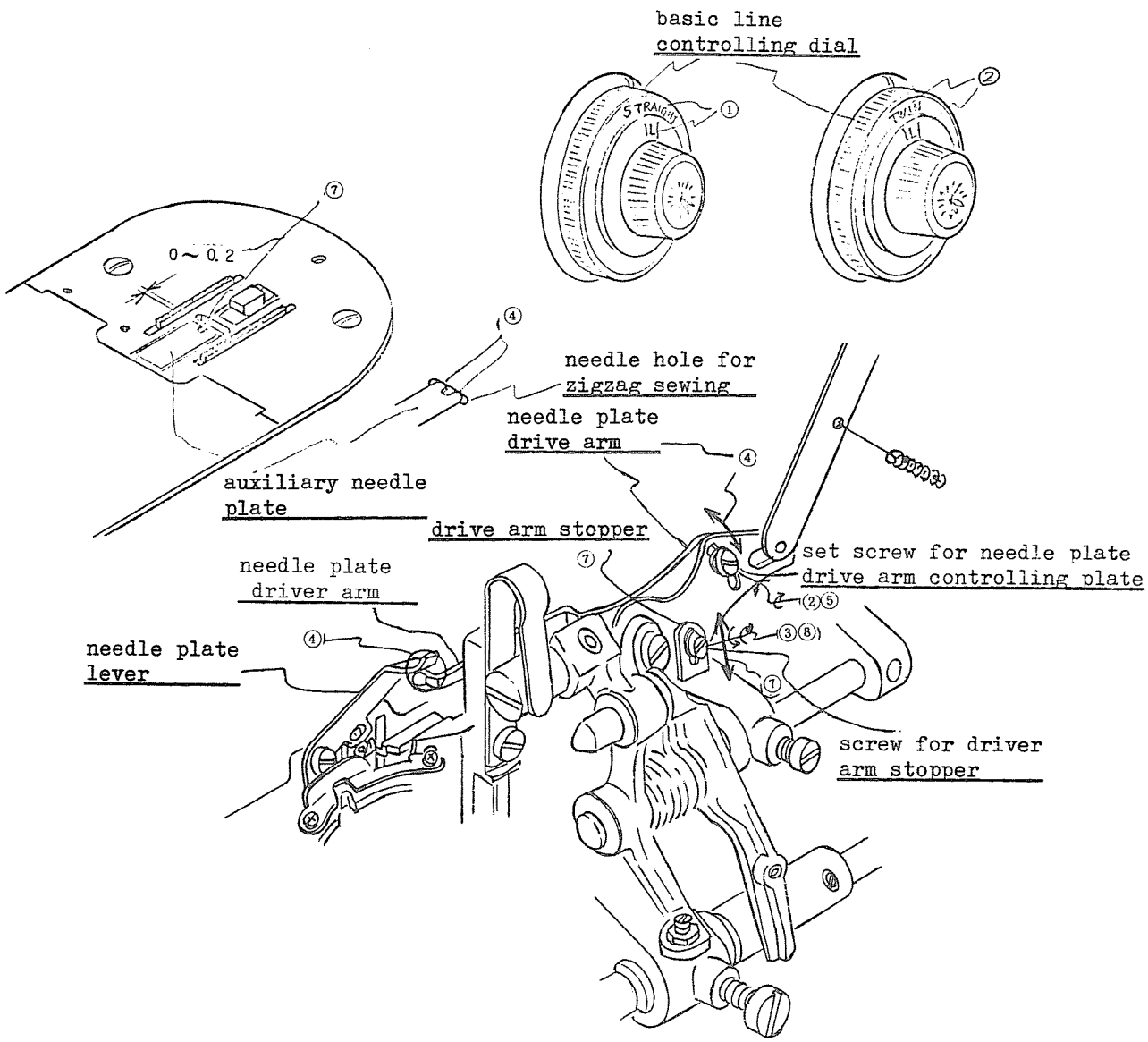

POSITIONING OF THE FEED SELECTOR CAM

1. Set the position of the feed selector cam as shown in the drawings.
2. Set the button hole dial at "OFF" position, and temporarily secure one of the screws in such a position just after that the pin member of the feed claw holder descends to the root from the tooth of the cam.
3. After setting the button hole dial at "S" position, check if the pin is just in middle position of the cut-off portion provided at the summit of the cam.
4. Tighten two screws firmly.

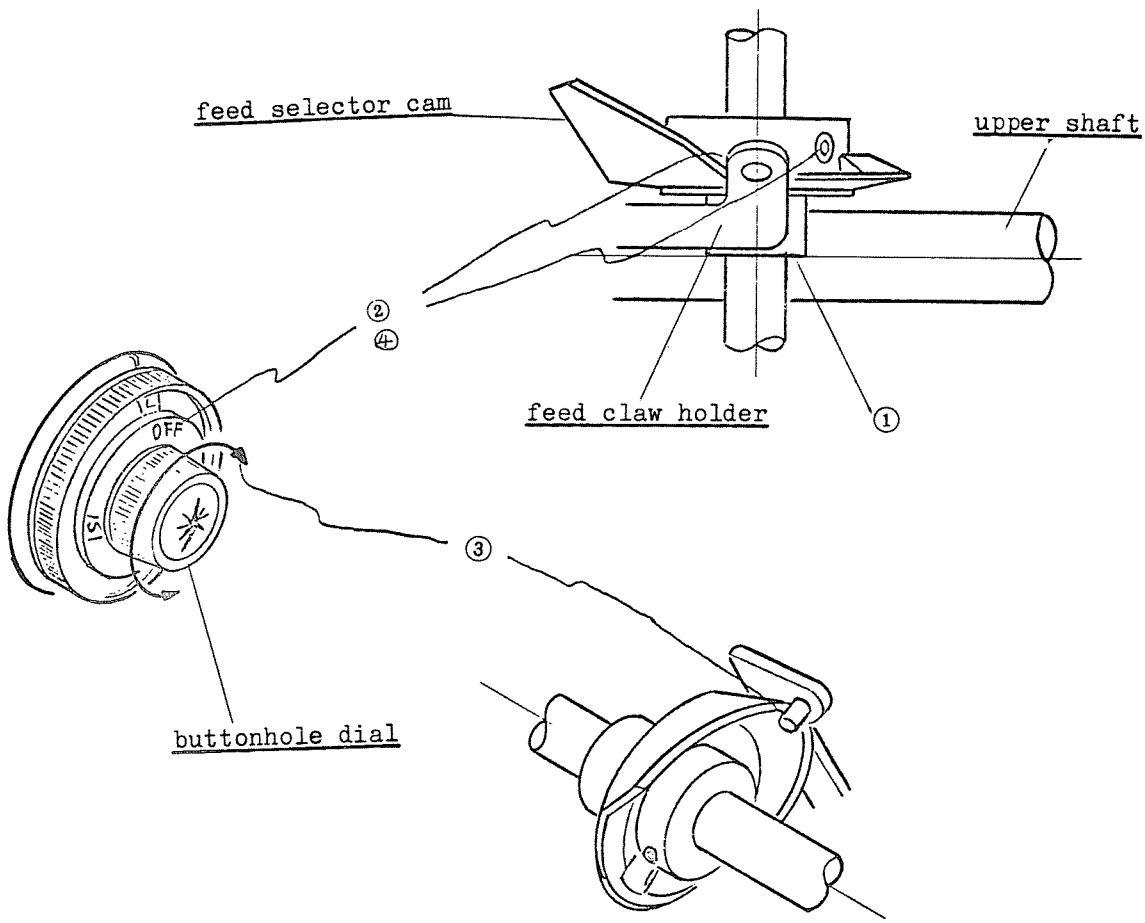

POSITIONING OF THE BUTTON HOLE WIDTH REGULATING CAM

1. Place the button hole feeding controlling arm on the button hole width regulating cam as shown in the drawings.
2. Set the button hole dial at "L" position, and secure the screw on the right of the button hole width regulating cam in a position such that the said screw faces to the right end of the claw holder.
3. After setting the button hole dial at "3", check if the button hole feeding controlling arm is out of contact relation with the cam.
4. Tighten the left side screw.

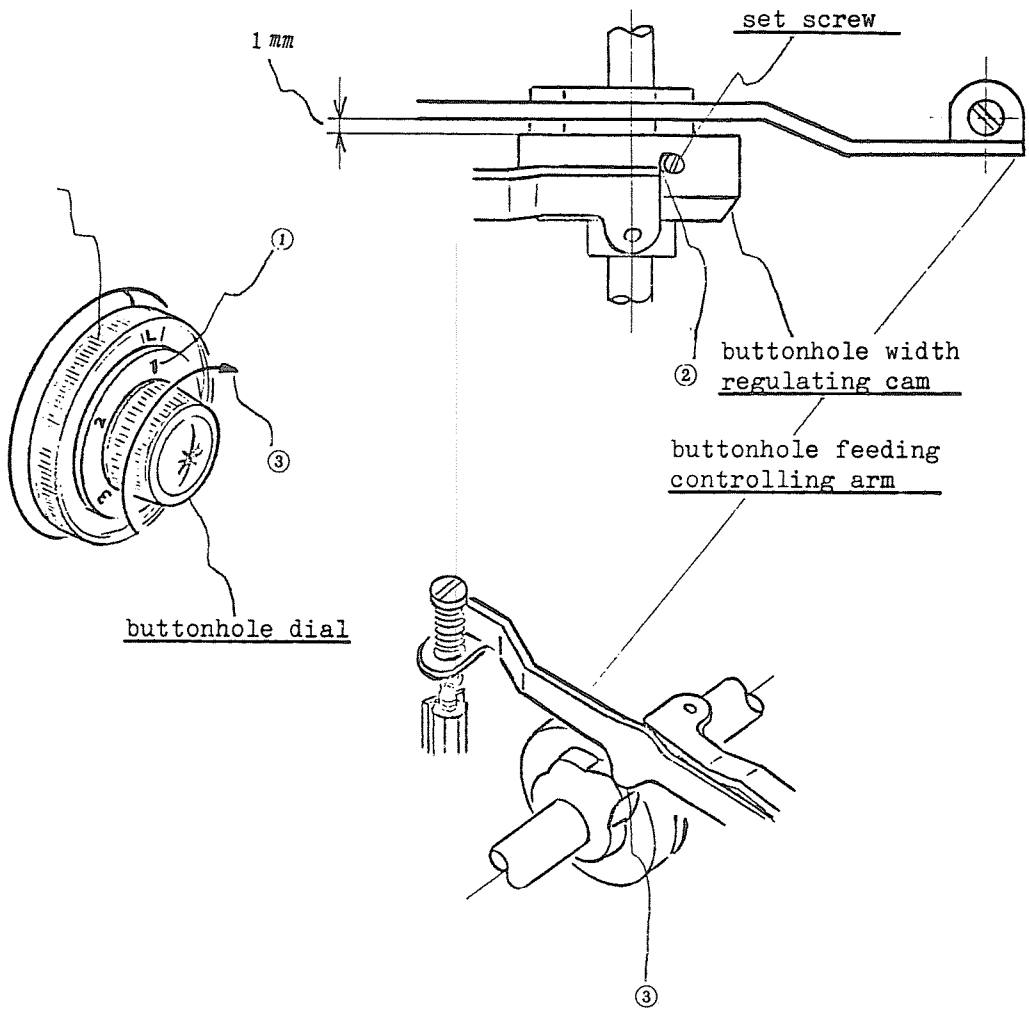

ADJUSTMENT OF THE DIFFERENCE IN BUTTON HOLE PITCH.

* The difference in button hole pitch. The length of the stitchings on the left and right side of a button hole should be adjusted according to the standard such that 10 stitchings on the left side is equivalent to 10 to 14 stitchings on the right side.

To adjust the pitch:

1. Set the feed controlling dial at "0.5" and the zigzag width regulating lever at "7".
2. After setting the basic line controlling dial at "L" position, check the length of the stitchings on the left and right sides of the button hole while changing the button hole dial between the graduation "1-2-3-2".
3. In the case as shown in Figure "A", turn the feed controlling screw slightly to the left. In the case of Figure "B", turn the screw slightly to the right.

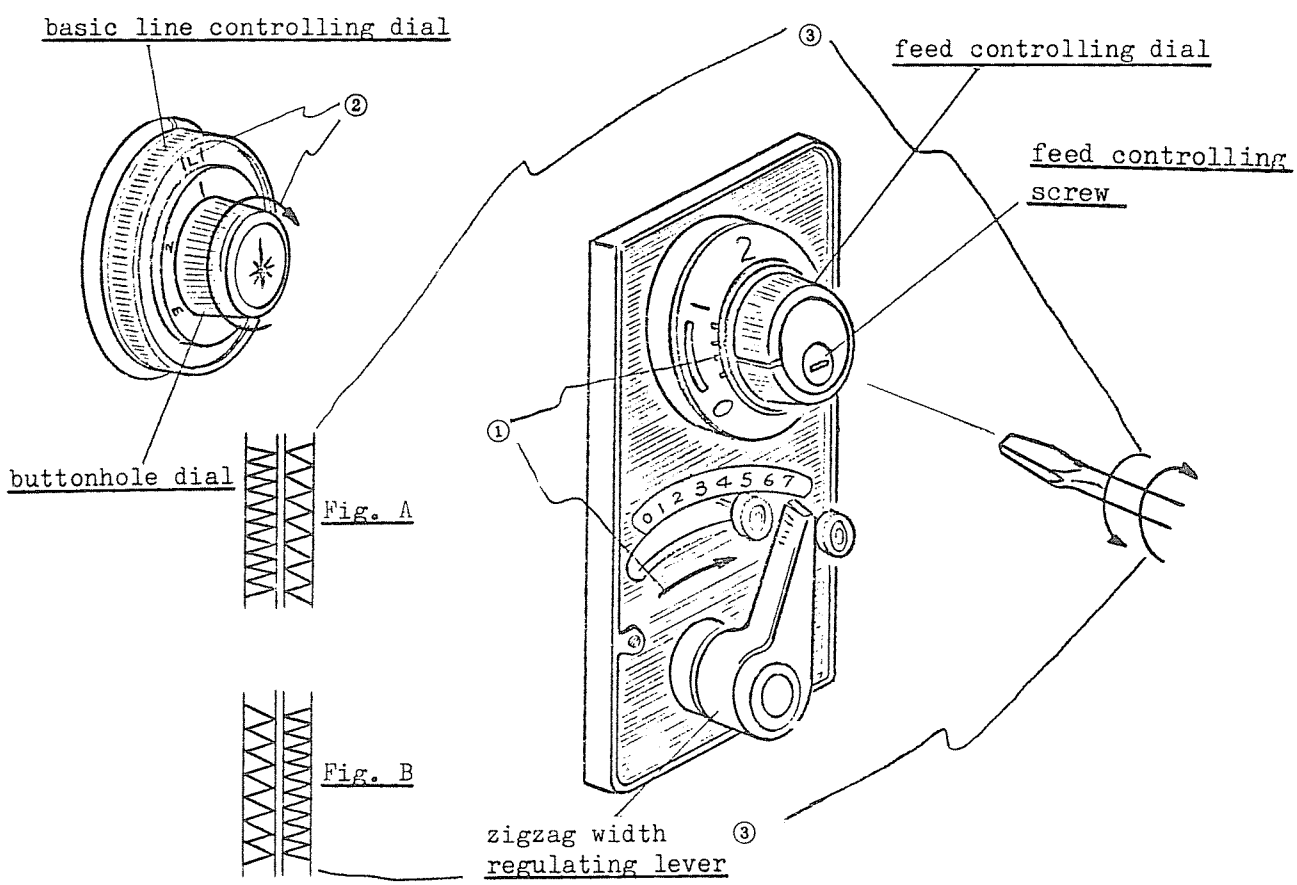

ADJUSTMENT OF BOTTONHOLE WIDTH

* Buttonhole width

The standard buttonhole width is 4.5 to 5 mm. and the standard inner width for cutting space between the two rows is 0.6 mm.

* How to adjust:

1. Set basic line controlling dial at "L" and zigzag width regulator lever at "7".
2. Place a piece of paper under presser foot and turn buttonhole dial from 1, 2 to 3 to check the width.
3. Loosen or tighten buttonhole stopper screw to make adjustment.

In case of the Fig. A: Turn the screw to the left (loosen)
In case of the Fig. B: Turn the screw to the right (tighten)

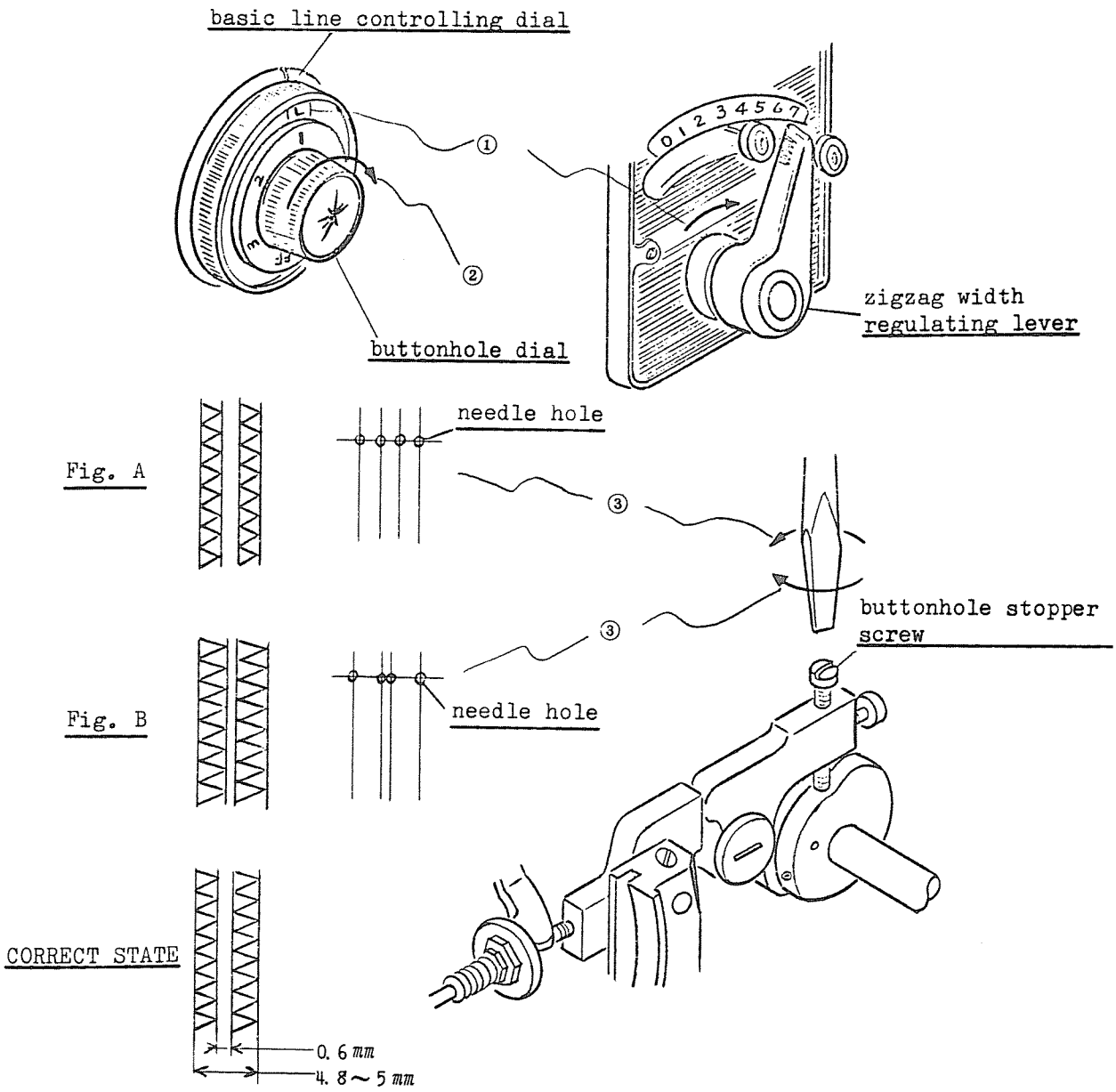

"ZERO" ADJUSTMENT OF BUTTONHOLE

"ZERO" Adjustment of Buttonhole

In case of bartacking in the buttonholing work, the adjustment shall be made so that fabric cannot be fed if the buttonhole feed comes to the maximum.

How to adjust:

1. Set stitch length regulator knob at "4", basic line controlling dial at "L", buttonhole dial at "2", zigzag width regulating lever at "7" and drop feed knob at "2".
2. Place a piece of paper and turn a hand wheel.
   * When the paper goes forward, loosen clamp screws and turn buttonhole feed adjusting rod set screw to the right.
   * When otherwise, turn to the left. (the feed volume is not more than 1 mm. at 20 stitches.)

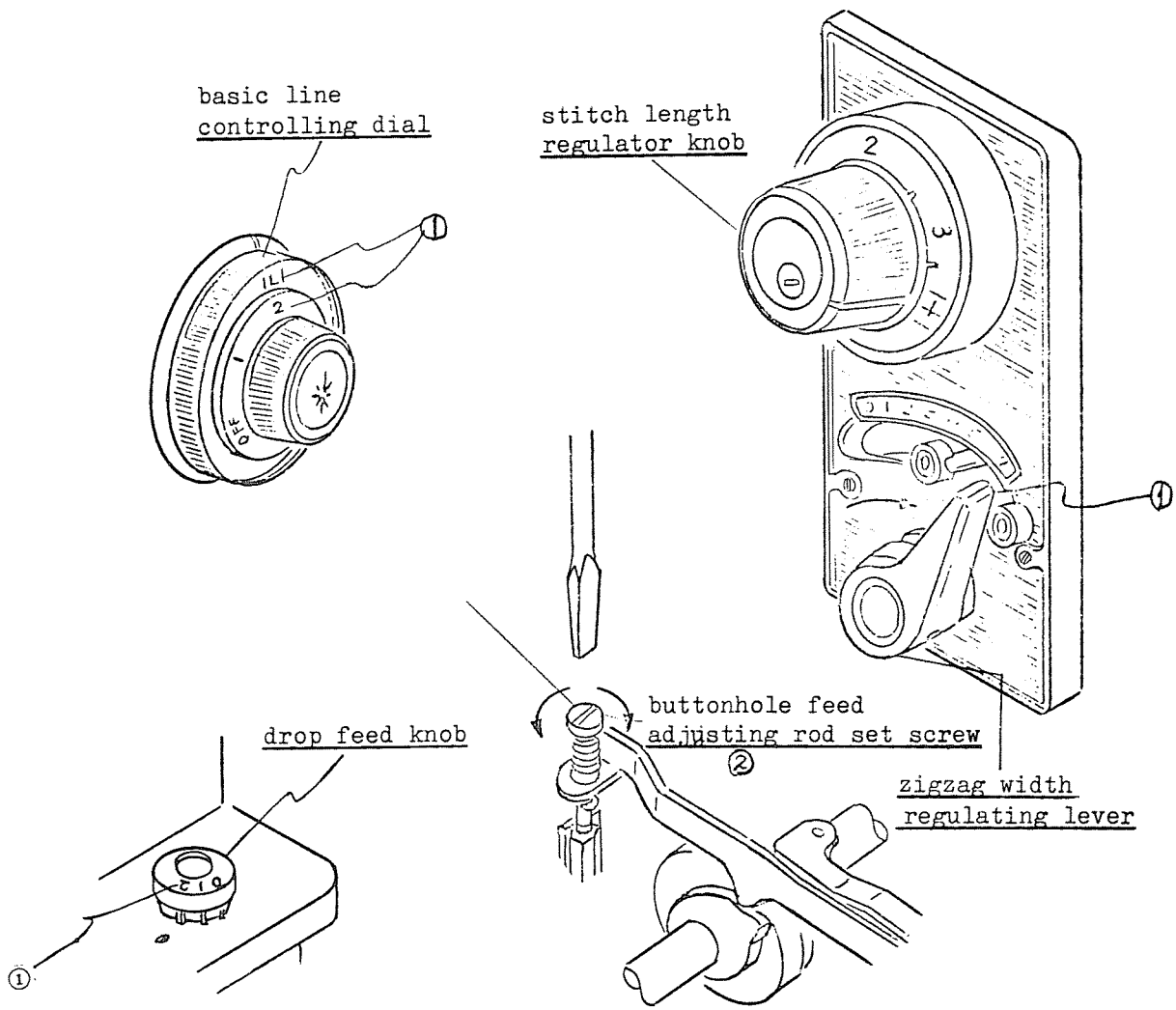

ADJUSTMENT OF HEIGHT OF FEED DOG

※ Height of Feed Dog

The standard height of feed dog above the surface of needle plate is 0.7 to 0.85 mm. when the forward feed is put at the maximum and presser foot lowers with drop feed knob set at "2", and 0.35 to 0.45 mm. at "1".

A. Adjustment when drop feed knob is set at "2".

1. Set stitch length regulator knob at "4" and needle bar should be put to its upper limit.
2. Loosen feed lifting roller shaft set screw.
3. Turn feed lifting roller shaft with a screw driver to make adjustment.
4. After the standard height is obtained, clamp feed lifting roller shaft set screw.

B. When drop feed knob is set at "1".

5. Loosen drop feed pluner connecting rod set screw and take out drop feed plunger unit to make adjustment.
6. Tighten the set screw firmly.

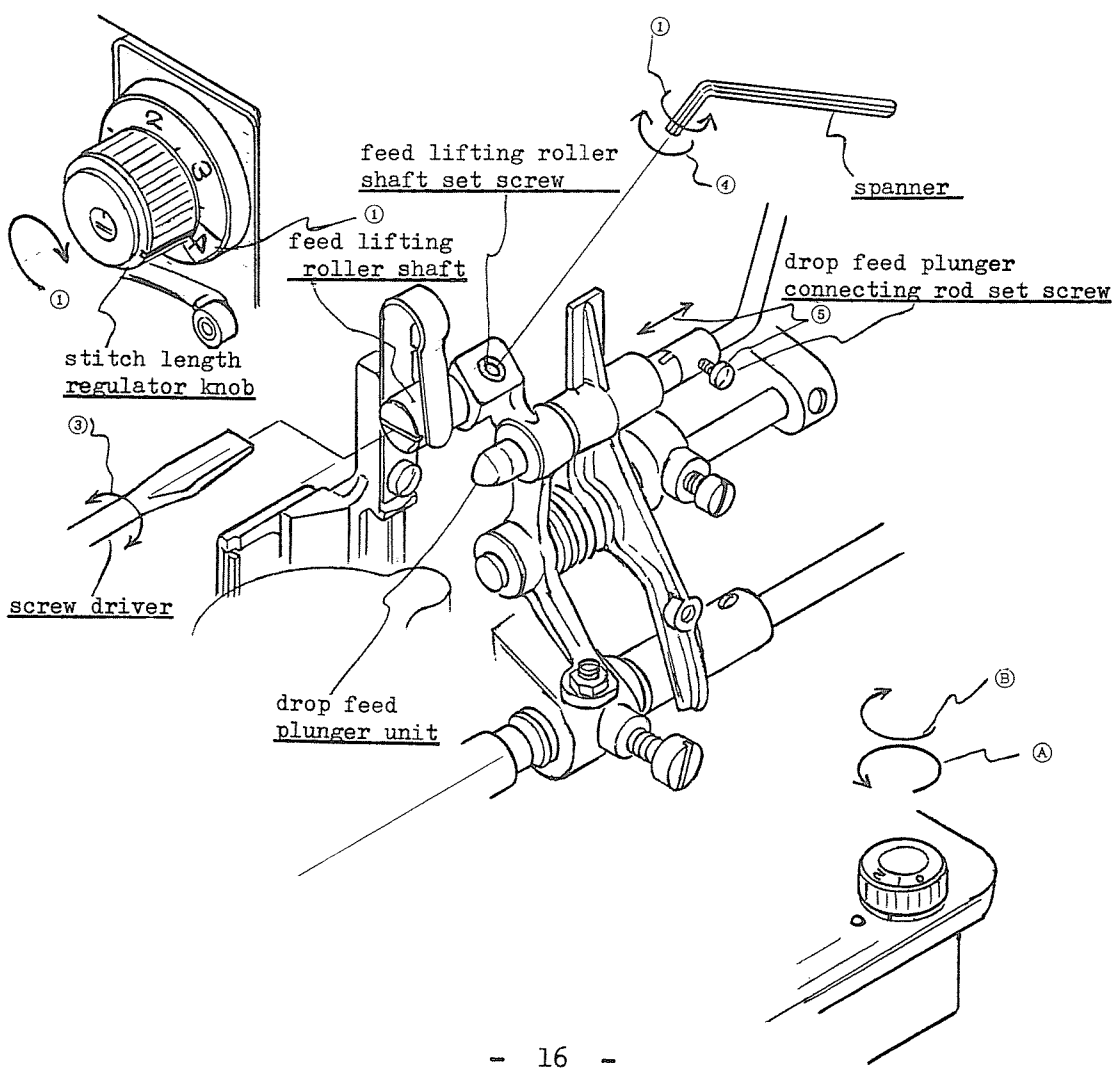

ADJUSTMENT OF PRESSER FOOT'S DIRECTION

The installation direction of presser foot shall be determined in such a way as the needle can drop in almost the centre of needle hole of straight presser foot. The standard clearance between the presser foot and the needle plate, when it lifts, is 6.0 to 7.0 mm.

How to adjust it;

1. Set buttonhole dial at "S", basic line controlling dial at "L" and zigzag width regulator lever at "0".
2. Fit straight presser foot.
3. Lower the foot and needle bar to see the relation between needle and presser's needle hole, and the relation (parallel degree) between presser foot and two grooves of the needle plate.
4. Lift the presser foot, loosen presser bar guide bracket set screw to correct the direction of the presser foot.
5. Assure a clearance between the presser and needle plate (as wide as a nexagonal pencil can get through).
6. Tighten the set screw firmly.

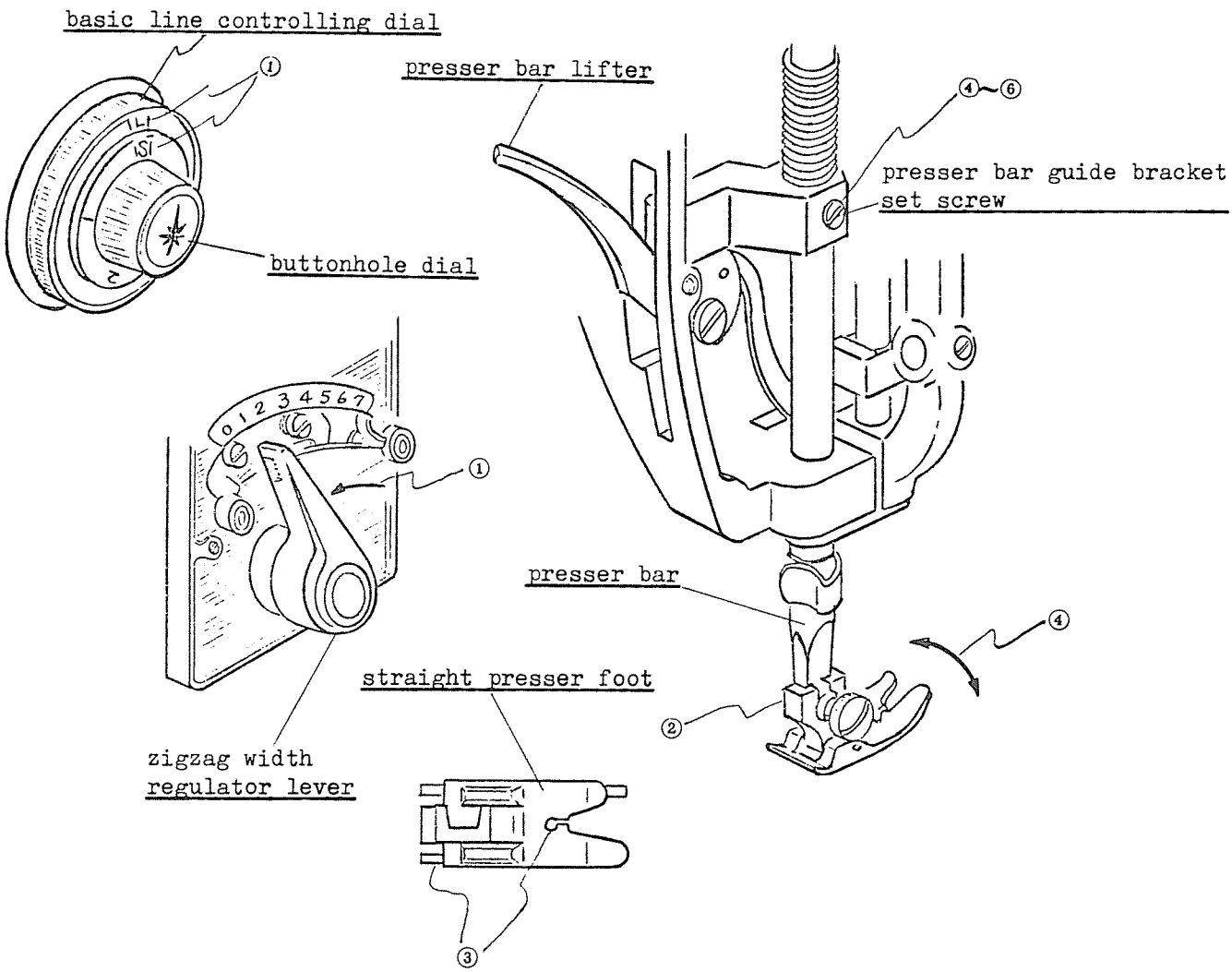

ADJUSTMENT OF SUPER PATTERN ELONGATOR

The adjustment of super pattern to elongate or shorten zigzag stitches can be conducted by turning super pattern elongator knob. When standard pattern cannot be obtained even if the knob is set at the normal position, the adjustment should be made as follows:

1. Remove super pattern elongator knob.
2. Replace essential cam with cam No.19.
3. Set basic line controlling dial at "L" and buttonhole dial at "S".
4. Set stitch length regulator knob at "4" and zigzag width regulating lever at "7" to try to stitch.
5. Turn super pattern elongator leading screw to the right (-), in case of the illustration A.
6. Turn super pattern elongator leading screw to the left (+) in case of the illustration B.
7. **After the adjustment, set the number "4" of the elongator knob to the indicator mark on arm's top cover and push the elongator knob to full capacity.**

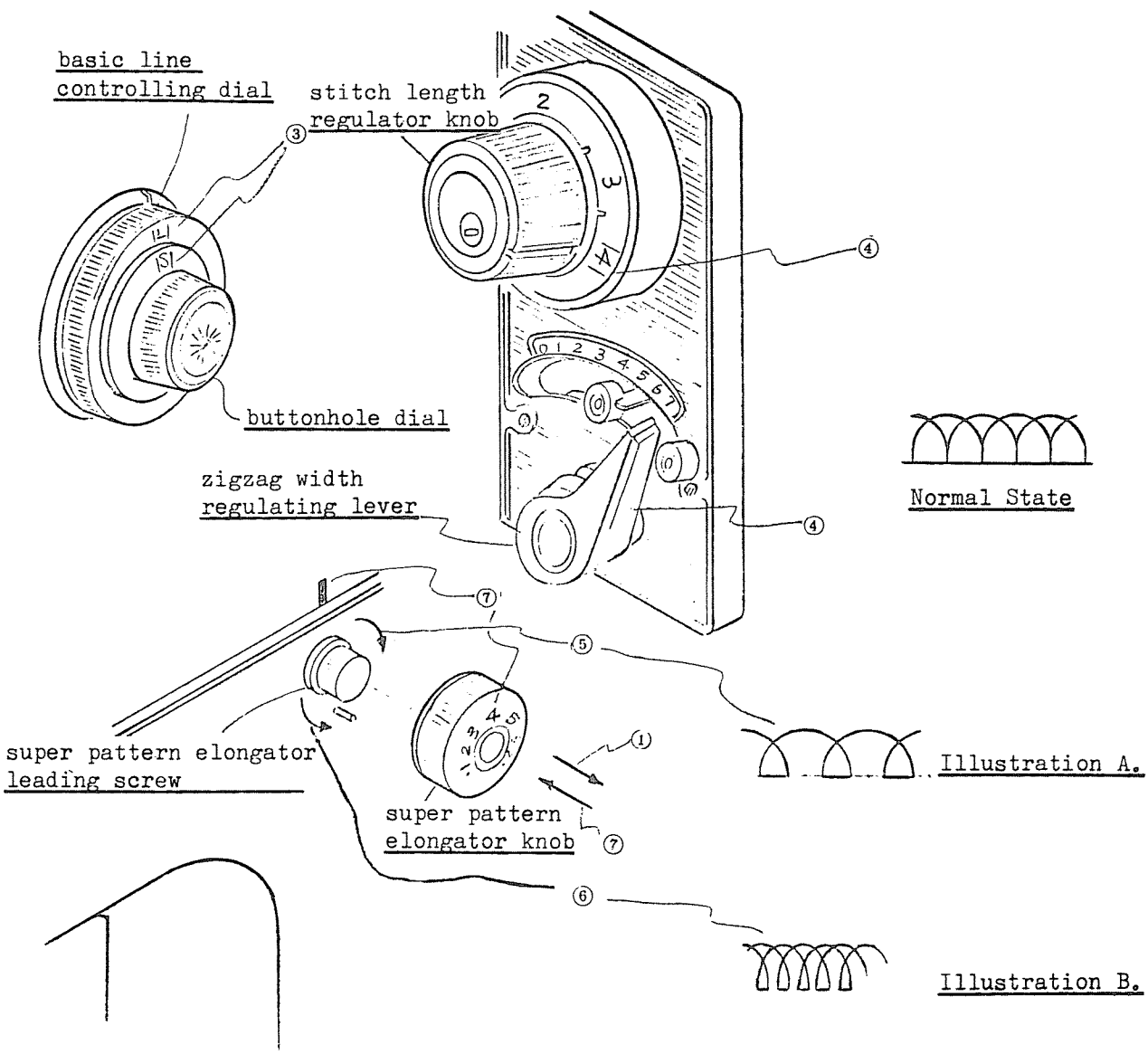

POSITIONING OF FEED LIFTING CAM

The confirmation of whether to position feed lifting cam correctly should be required, when the volume of needle stroke and a clearance in the needle center have been adjusted.

It is regarded as standard that the hole on the side of feed lifting cam is at the lowest place, when needle bar comes up to the upper limit.

* How to Adjust:

1. Tilt the head back and loosen feed lifting cam set screw.
2. Keep needle bar positioned at the highest point.
3. Adjust in such a way as making the 2ø hole on feed lifting cam's profile look aside (opposite to bed's surface).
4. Keep the feed lifting cam lightly in touch with oscillating shaft front bushing.
5. Then, tighten the feed lifting cam set screw.

After the adjustment, please see if feed dog moves horizontally while it comes up above the needle plate and goes in, when stitch length regulator knob is set at "4" and drop feed knob at "1", with a balance wheel turned towards you.
And yet, see if the finished pattern can be produced correctly by the use of super cam.

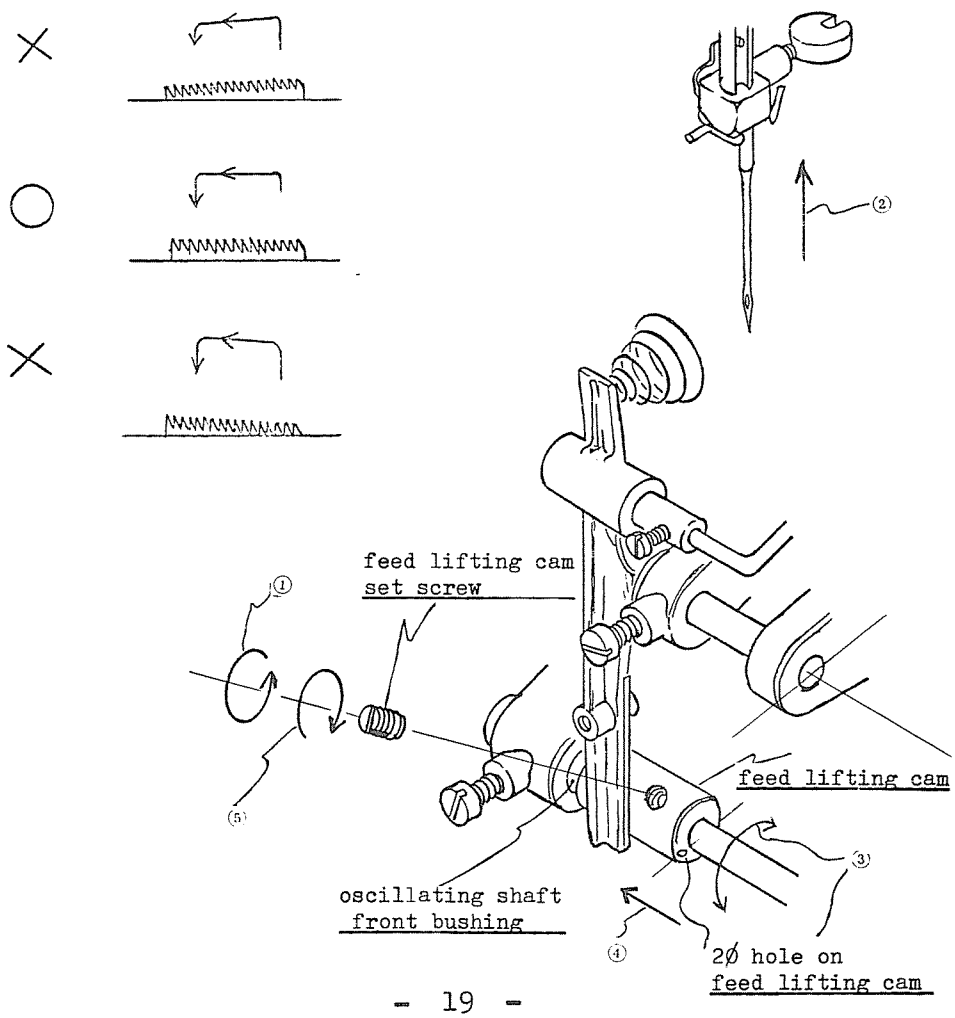

ADJUSTMENT OF THREAD TENSION REGULATOR AT "O"

The adjustment of thread tension regulator at the "O" point. The standard thread tension is turned up at a range from 10 to 30 grammes when the regulator knob is set at "O" and 85 plus or minus 30 grammes at "3". (Use No.50 cotton thread)

How to adjust:

1. Release thread tension regulator unit.
2. Turn thread tension leading screw to loosen check spring off and see if thread passes through discs without resistance.
3. Set an indicator mark on its bracket at the dial "O" and push the dial up to an end.

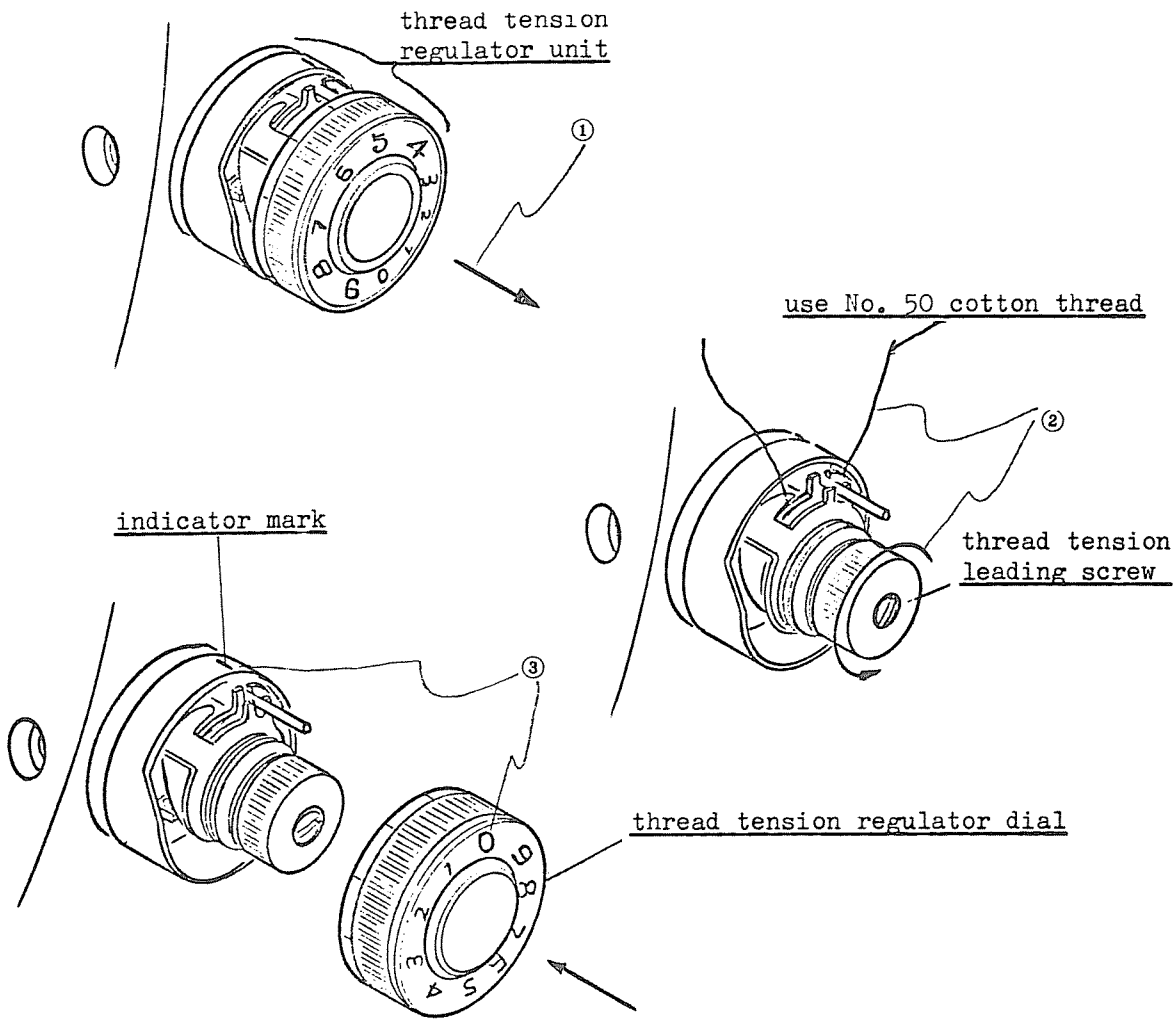

REPLACEMENT AND ADJUSTMENT OF CHECK SPRING

* How to remove;

1. Turn thread tension regulator dial to set at "9".
2. Loosen its set screw and remove the regulator unit from the head body.
3. Pull out the dial.
4. Loosen the set screw and take out thread tension regulator bracket.
5. Then, remove check spring.

* How to fix;

6. Reset check spring into its stopper's outer groove and thread tension bar.
7. Adjust the strength of check spring as follows;
   Try to find the position where it touches the stopper on the guard lightly to get ready to start into action. From this position, put the spring into the first groove to the right.
8. Fit thread tension stud into its bracket and tighten set screw.
9. Set thread tension bracket's indicator mark to the dial "9" and push the dial as far as it goes.
10. With the indicator mark coming at the top of it, fix it on the head body again and tighten set screw firmly.

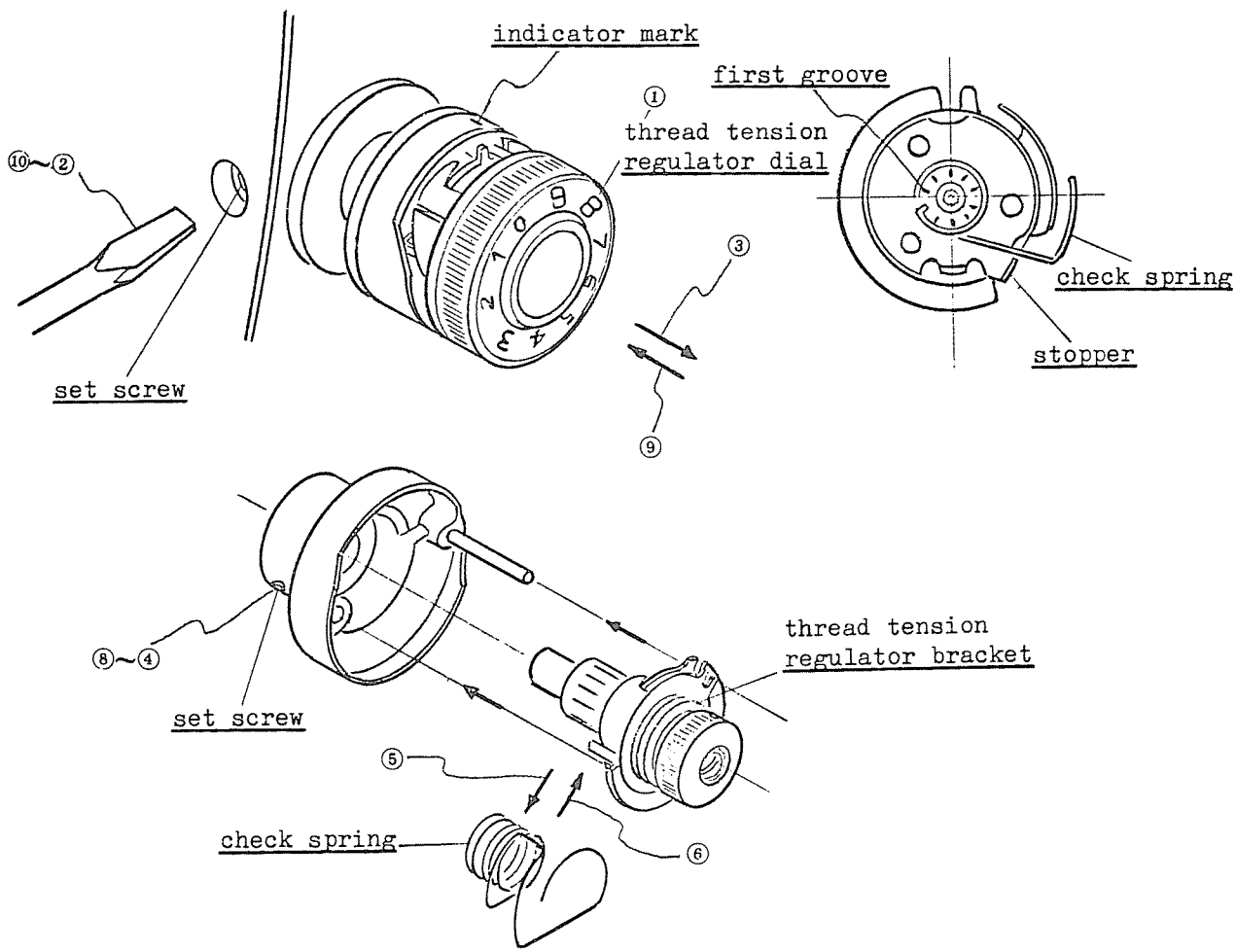

REGULATING OF SPRING PRESSURE OF NEEDLE BAR SUPPORTER

The standard spring pressure at needle bar supporter is 400 to 600 grammes at the position of the needle bar connecting link hinge.

(Note: If the spring is too strong, zigzag width stitch will be often cut.)

1. Maintain driver (A) in the state where needle bar supporter set screw is loosened.
2. Push needle bar supporter pin with driver (B) lightly and turn the driver to regulate the spring pressure.
3. Tighten needle bar supporter pin set screw back.

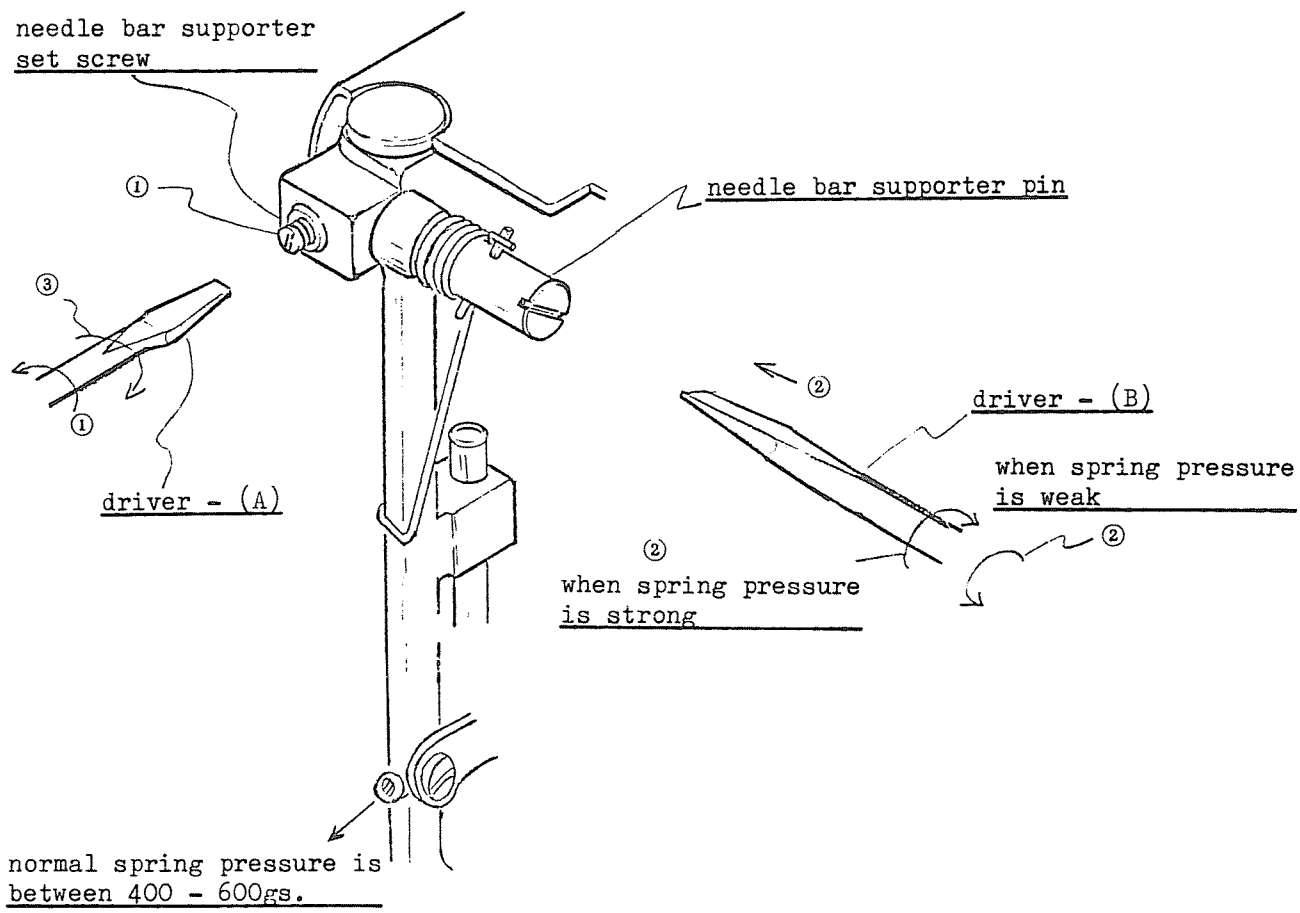

ADJUSTMENT OF RATTING TOP COVER

When top cover of the arm bed is unstable and rattles, the adjustment should be made by pushing stopper spring up and down.

If it is still wrong, correct it in the following way:

1. Loosen stopper metal set screw.
2. Adjust top cover stopper metal to slide up and down. And determine the position of the cover's front side.
3. Fix the stopper metal set screw tightly.
4. Loosen set screw of top cover stopper spring.
5. Slide the stopper spring to the left or right.
6. Clamp the set screw firmly.

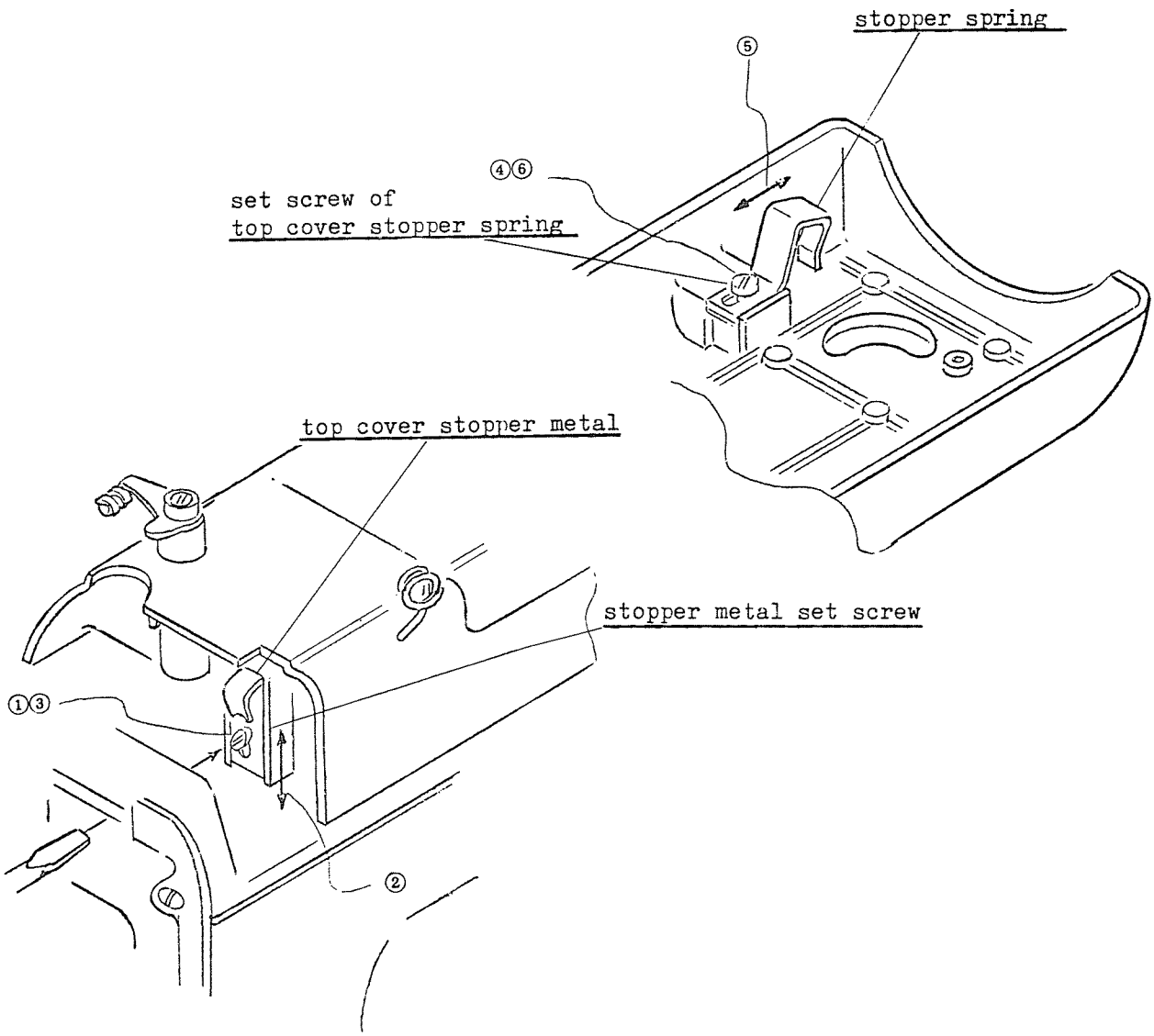

BELT'S TENSION AND ITS ADJUSTMENT

The tension of belt should be kept always at an appropriate level. If it is too tight or too loose, the belt will be responsible for snapping or slipping in the heavy-duty sewing operation.

1. Loosen belt cover set screw (1) and (2) to remove the cover.
2. Loosen pulley base set screw.
3. Move the pulley's unit up and down a little bit, so that the belt's bending may be in a range from 7 to 8 mm when you push synchro belt with the force of about 500g almost in the middle of it.
4. Tighten pulley base set screw back.
5. Loosen motor holding screws (2 pcs.)
6. Adjust the position of the motor holding unit in order to get a clearance of 4 to 5 mm between the belt and arm screw's side, when you push motor belt in the middle with the force of about 500g.
7. Clamp motor holding screws (2 pcs.) tightly.
8. Fix the belt cover and tighten its screw back.