baby lock

MODEL BL8800

SERVICE MANUAL

PRO LINE

TABLE OF CONTENTS

A.REMOVING THE FRONT COVER

1. Remove the set screw (a) and the light cover. (fig. A-1)
2. Remove the left side screw (b) inside the thread take up lever cover. (fig. A-2)

fig. A-1

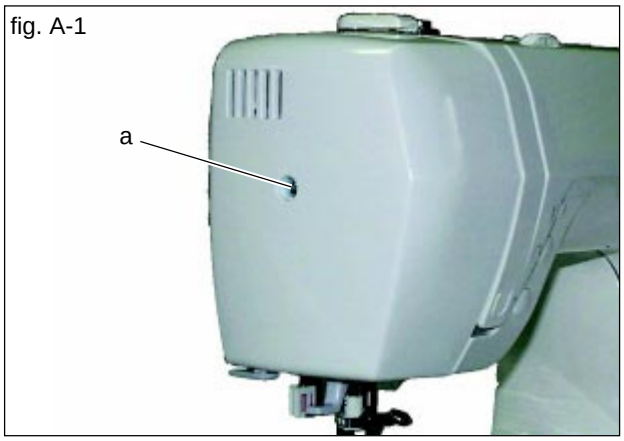

fig. A-2

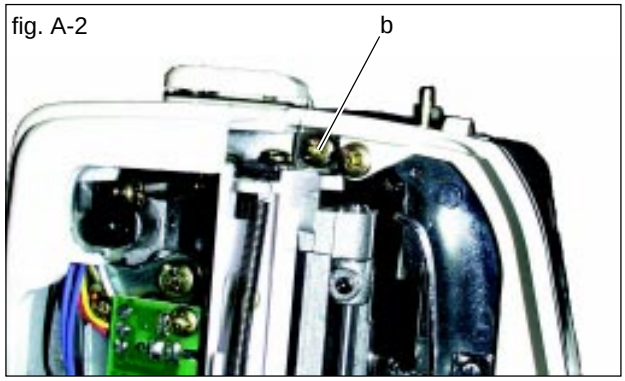

fig. A-3

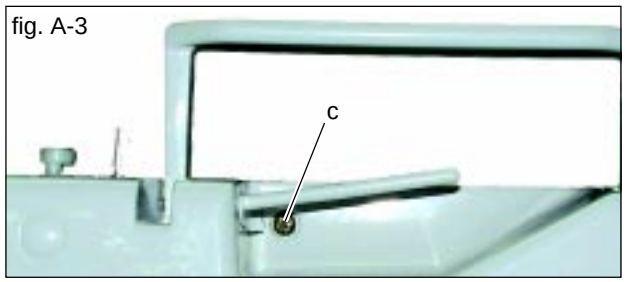

3. Remove the screw (c) located on the backside of machine, above the spool pin. (fig. A-3)

4. Tilt the machine backward.
   Remove the 4 screws (d) and base. (fig. A-4)

fig. A-4

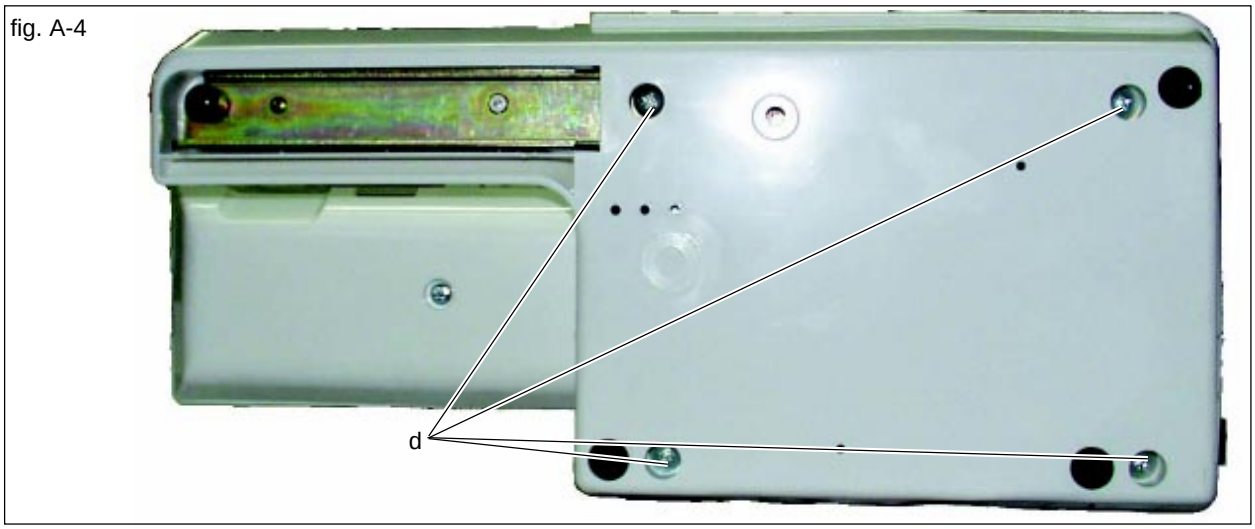

5. Remove the 2 screws (e) on the bottom of front cover. (fig. A-5)

fig. A-5

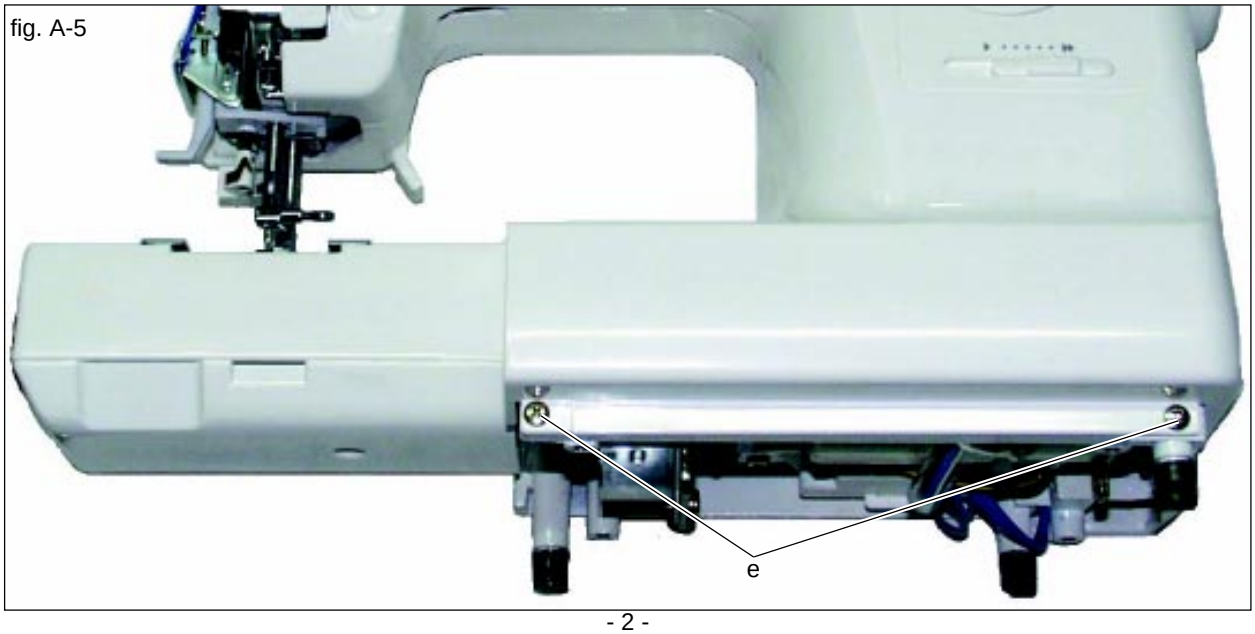

6. Stand up the machine.
   The terminal cover will come out.
   Insert the screwdriver into the hole of machine from backside.
   Hook the tip of driver into the groove of forward-reverse adjusting knob (f). (fig A-6)
   Slide them to the left and remove the knob.

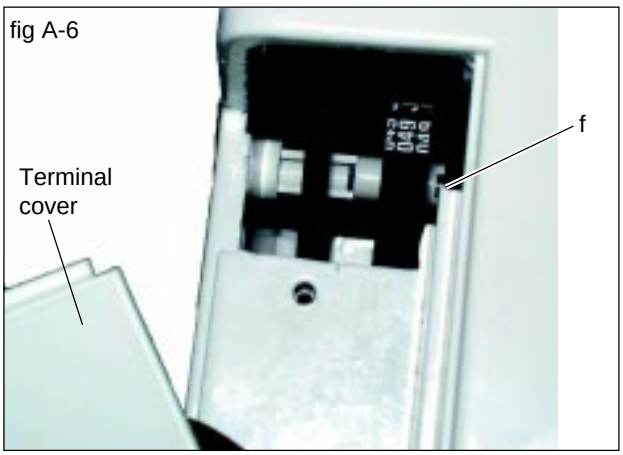

fig A-6

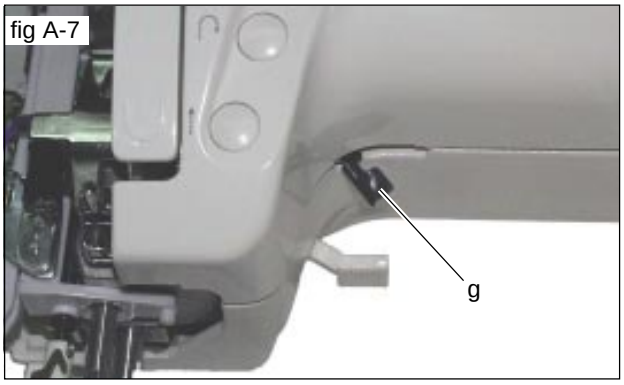

fig A-7

7. Hook the tip of screwdriver to the front cover holder (g) and pull down. (fig. A-7)

8. Tilt the machine backward again.
   Hold the machine casting and push the left bottom corner (h) of front cover upward. The hook inside of the cover will come off. (fig. A-8)

9. Bring up the front cover carefully.
   Disconnect the two cord connectors (i, j) from the CPU curcuit board. (fig. A-9)

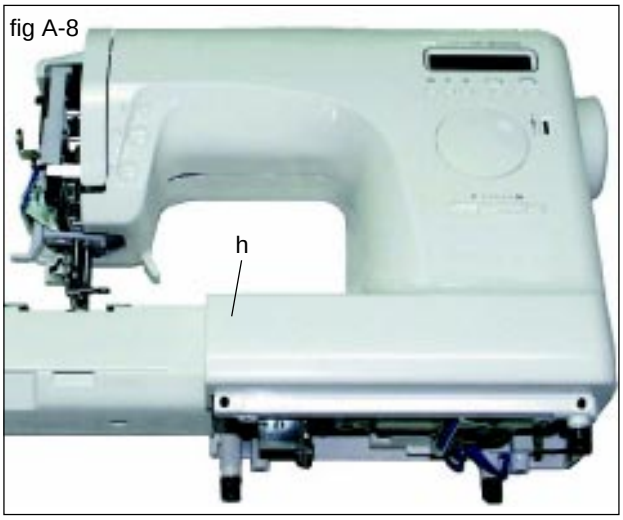

fig A-8

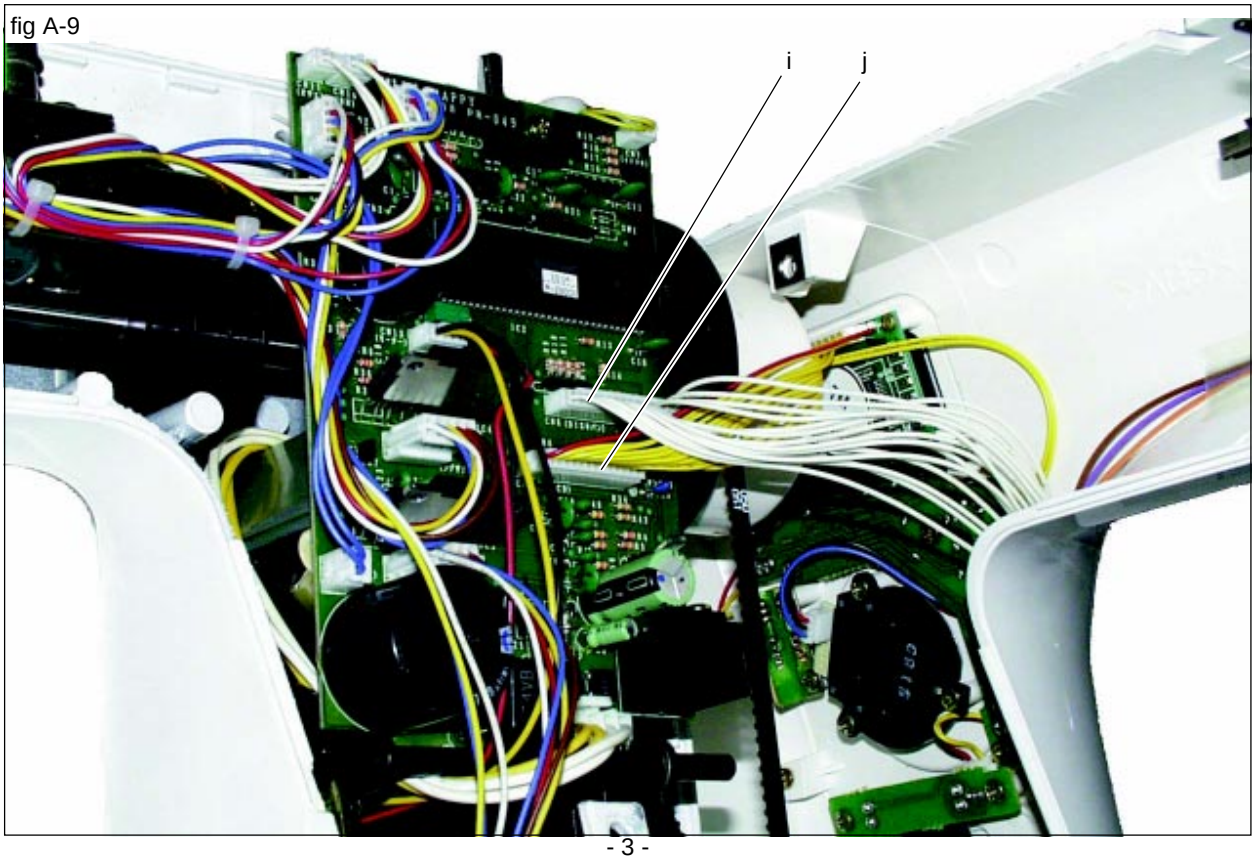

fig A-9

B. REPLACING THE FRONT COVER

1. Lower the presser foot lifter (k).
   Turn the hand wheel toward you until the thread take-up lever (l) rises to its highest point. (fig. B-1)

2. Connect the two cord connectors (i, j) from front cover to the CPU circuit board on machine. (fig. A-9)

3. Set the front cover onto the machine casting so that the tip of thread tension relasing lever (m) should be hooked into the notch of tension guide (n). (fig. B-2,3,4)
   Check that the tension releasing mechanism has been connected certainly.

fig. B-1

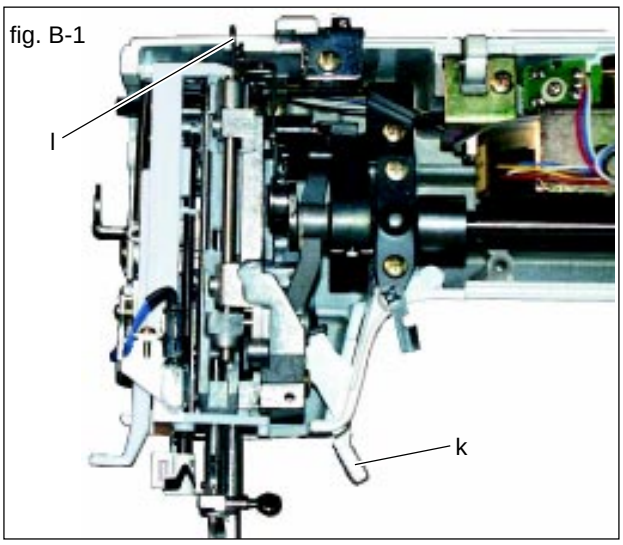

fig. B-2

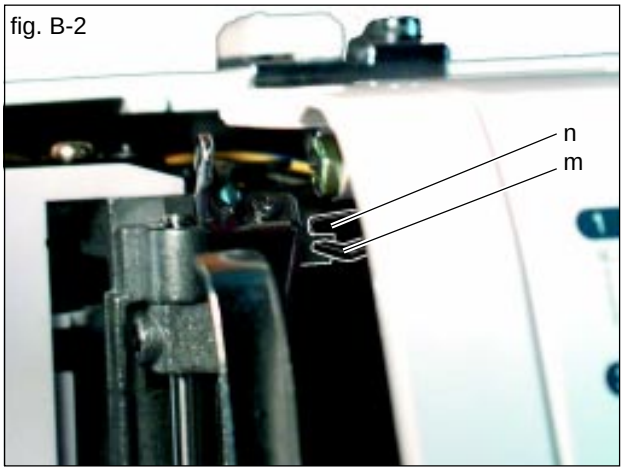

fig. B-3

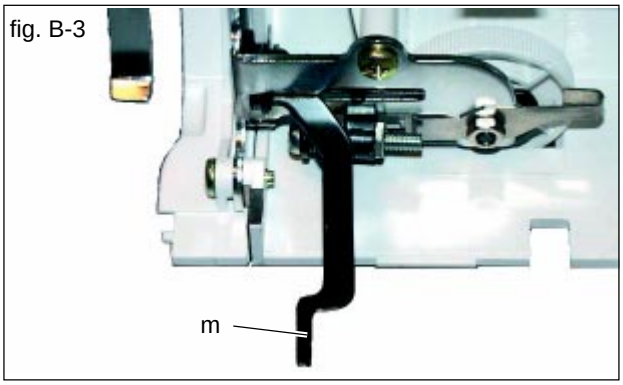

fig. B-4

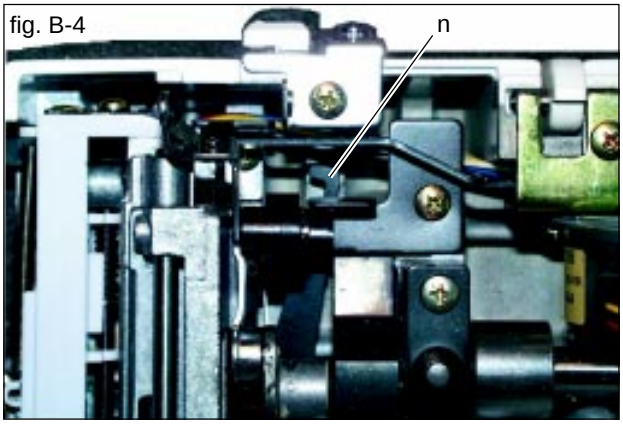

4. Press the left side of front cover downward so that the hook inside of cover will snap into a place.

5 Tighten the 2 screws (e) onto the bottom of front cover. (fig. A-5)

6. Push up the front cover holder (g). (fig. A-7)

7. Insert the forward-reverse adjusting knob (f) into the hole with the hook facing forward. (fig. B-5)

8. Replace the terminal cover and base, and tighten 4 screws (d) onto the base. (fig. A-4)

9. Tighten the screw (c) onto the back of machine. (fig. A-3)

10. Tighten the screw (b) onto the take-up lever cover. (fig. A-2)

11. Replace the light cover and screw (a). (fig. A-1)

fig. B-5

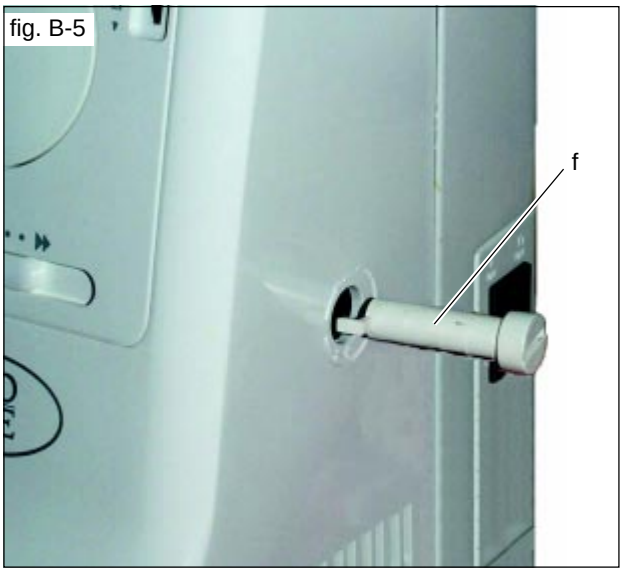

1. HEIGHT OF NEEDLE BAR

Height of needle bar could be the cause for stitches to skip. Check as the following procedures.

1. Set the pattern number at “2” which is straight stitch on center needle position.

2. Raise the needle bar to its highest point by turning the handwheel toward you. Remove the presser foot. Remove the set screw (a) and needle plate. Lift up the bobbin holder and remove it. (fig. 1-1)

fig. 1-1

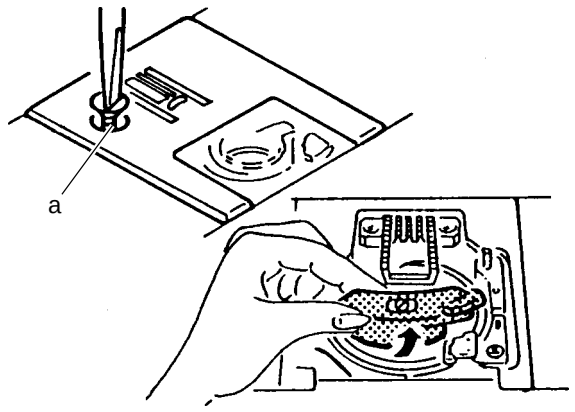

3. Turn the handwheel toward you until the needle comes to its lowest point.
   Then, the spacing between the surface of hook race and the top edge of needle eye must be 5.2±0.2 mm. (fig. 1-2)
   (= Turn the handwheel until the top edge of needle eye is aligned with the surface of hook race, at this time the needle bar should be rising 5.2±0.2 mm from its lowest point.)

fig. 1-2

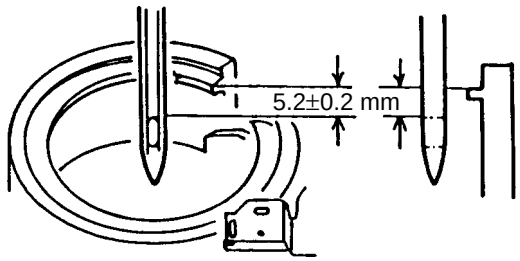

If this spacing is not correct, adjust as follows.

4. Remove the light cover.

5. Lower the needle to its lowest point by turning the handwheel.

6. Loosen (not remove) the screw (b) on the needle bar holder. (fig. 1-3)
   Raise the needle bar until the needle eye is aligned with the hook race. Then, lower the needle bar 5.2 mm and re-tighten the screw (b).

CAUTION: DO NOT change the needle bar direction at this adjustment. The long groove of needle must be facing frontwards.

fig. 1-3

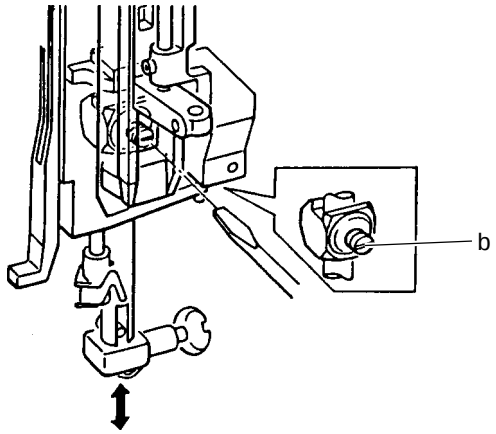

2. GAP BETWEEN NEEDLE AND HOOK

If the needle hits aginst the hook, it may be the cause of needle and thread breakages. If the gap between needle and hook is too big, it will cause to skip stitches. Check and adjust as follows:

Prior to make this adjustment, check that the needle is not bent and the needle is inserted correctly.

1. Remove the needle plate and bobbin holder. (See Sec. 1-2)

2. Set the pattern number at “1” . (Straight stitch on left needle position)

3. Turn the handwheel toward you until the needle will cross over the hook. (fig 2-1)
   Then, check the gap between needle and hook is about 0.02 to 0.1 mm. (fig. 2-2)

fig. 2-1

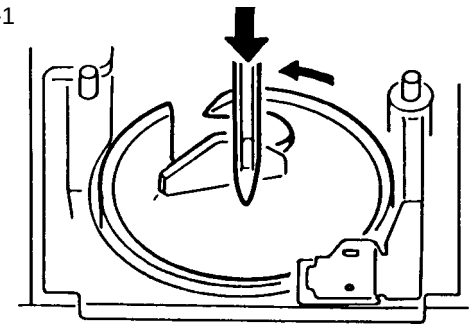

fig. 2-2

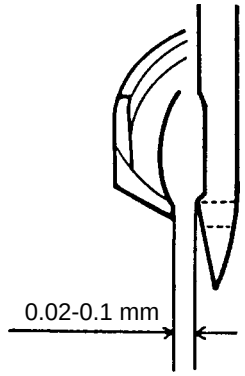

If the needle is hitting against the hook or if the gap is too much, adjust as follows:

4. Remove the light cover.

5. Remove the cap on the back side of machine. (fig. 2-3)

fig. 2-3

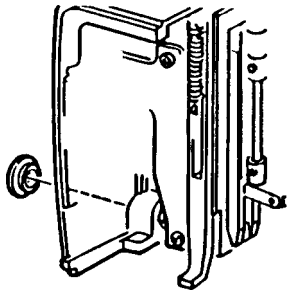

6. Loosen (do not remove) the lock screw with a hexagon socket screw key (3 mm). (fig.2-4)
   Adjust the gap by turning the adjusting nut (a) with an open ended spanner (10 mm).
   - If the gap is too big, turn the nut upward.
   - If the needle is hitting the hook, turn the nut downward.
   When correct gap is obtained, hold the nut and retighten the lock screw. Check the gap again.

7. Replace the cap and light cover. Replace the bobbin holder and needle plate.

fig. 2-4

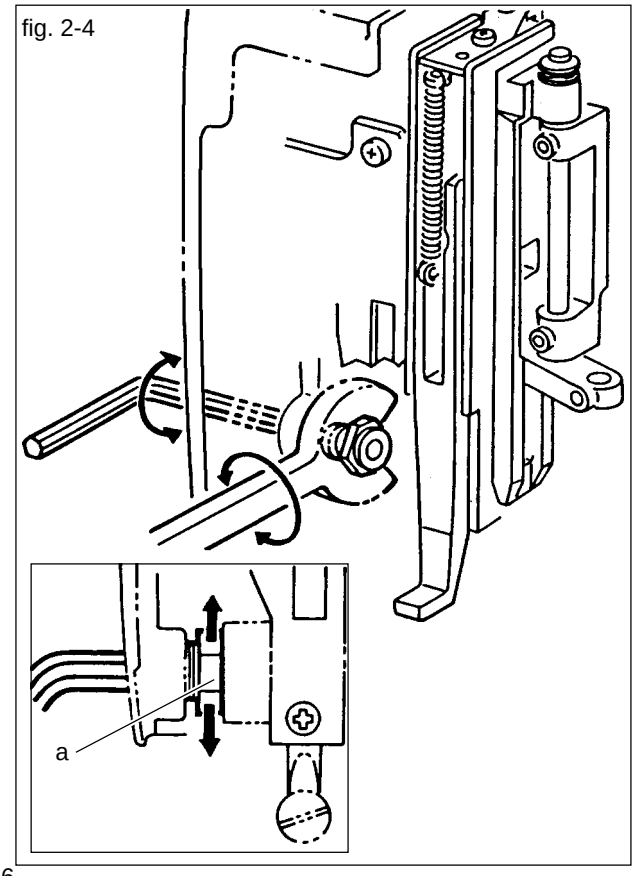

3. TIMING OF THE HOOK

Prior to making this adjustmetnt, be sure that the needle bar is set at the correct height. (See sec. 1)

Check the timing of hook as follows:

1. Remove the needle plate and bobbin holder. (See sec. 1-2)

2. Set the pattern number at “1”. (Straight stitch on left needle position)

3. Turn the handwheel toward you until the needle is at its lowest point.

4. Then, turn the handwheel slowly to turn the hook counter-clockwise until the tip of hook is aligned with the right side of needle. (fig. 3-1)
   At this time, the gap between the tip of hook and the top edge of needle eye should be 1.5 to 2.0 mm.

If the gap is too small or too large, adjust as follows:

5. Tilt the machine backward.
   Remove the bed lid by removing the screw (a) and sliding bed lid to the left. (fig. 3-2)

6. Loosen the two screws (b) on the lower shaft gear with a hexagon socket screw key (2.5 mm). (fig. 3-3)

7. Turn the hook race by hand so that the tip of hook will align with the right side of needle.
   In this position, hold the race with your left hand and turn the handwheel toward you to obtain the correct gap (1.5 to 2.0 mm). (fig. 3-4)

8. Tighten the screws (b) and check the timing again.

9. Replace the bed lid, bobbin holder and needle plate.

fig. 3-1

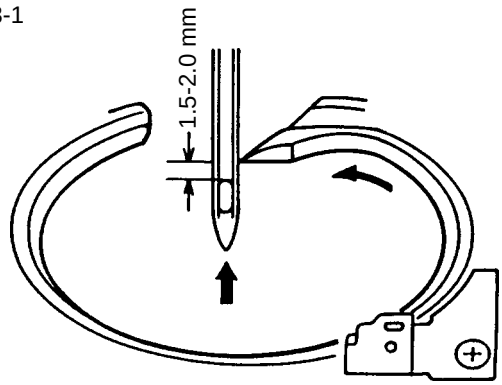

fig. 3-2

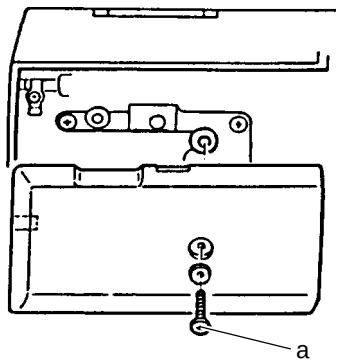

fig. 3-3

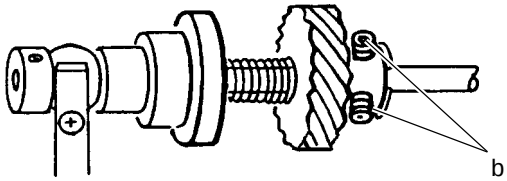

fig. 3-4

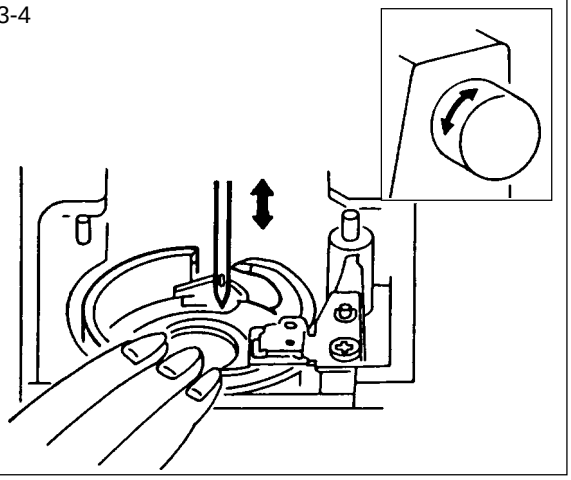

4. HEIGHT OF THE FEED DOG

If the feed dog does not come up over the needle plate enough, it will result in insufficient and/or uneven feed of fabrics.
The feed dog should come up over the needle plate $0.8^{+0.05}_{-0}$ mm. (fig. 4-1)
If it does not come up enough, adjust as follows:

1. Tilt the machine backward and remove the bed lid by removing the screw and sliding it to the left. (See sec. 3-5)

2. Lower the presser foot lifter. Turn the handwheel until the feed dog comes to its highest position.

3. Loosen the lock nut (a). Adjust the height of the feed dog correctly by turning the inner screw (b). (fig. 4-2)

4. Hold the screw (b) and re-tighten the lock nut (a).

5. Re-check the height and motion of feed dog by turning the handwheel.

fig. 4-1

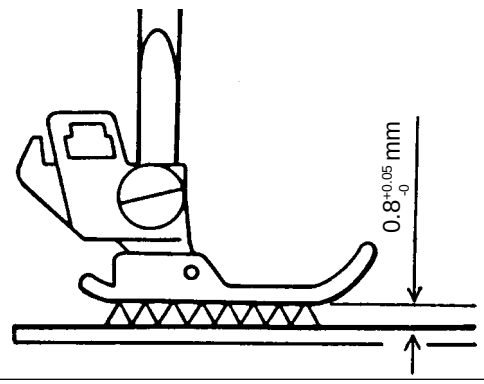

fig. 4-2

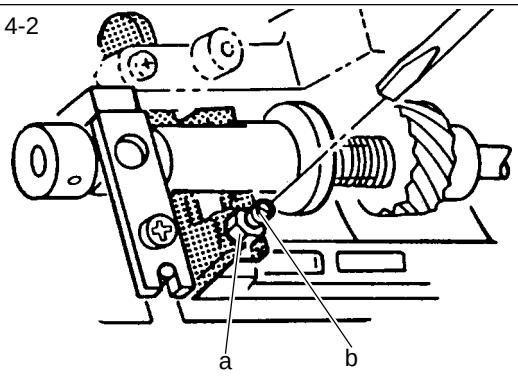

5. NEEDLE PLATE AND NEEDLE POSITON

When the zigzag width is set at maximum, the needle should fall evenly into the both sides of needle plate hole (the distance needle and edge of hole at each side). (fig. 5-1) If it is not so, adjust as follows:

1. Set the pattern number at “4” and stitch width to 5.

2. Remove the presser foot and the light cover.

3. Loosen the screw (a) located on the top of the needle bar guide assembly. (fig. 5-2)
   By slightly moving the needle bar left or right, adjust the needle position so that the needle falls evenly into the hole.

4. Tighten the screw (a) and re-check the position of needle.

fig. 5-1

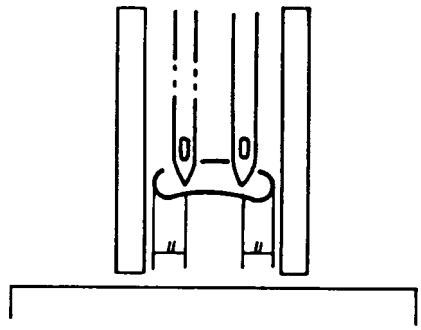

fig. 5-2

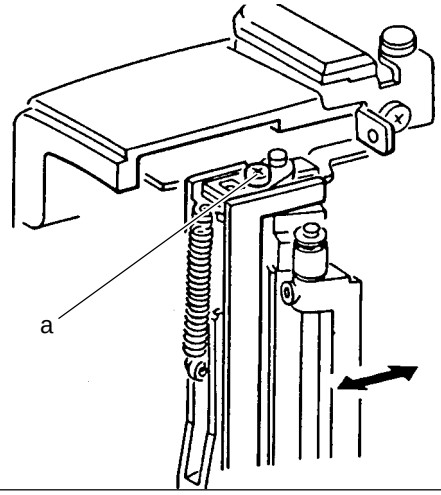

6. TIMING OF THE FEED MOTION

If the feed motion is too fast of foo slow, it will be the cause of fabfic puckers or needle breakage. Check and adjust the feed timing as follows:

1. Tilt the machine backward and remove the bed lid by removing the screw and sliding it to the left. (sec. 3-5)

2. Check that the guide-lines on the lower shaft and feed cam should be aligned. (fig. 6-1)

If it is not so, adjust as follows.

3. Loosen the two screws (a) on the feed cam with a hexagon socket screw key (2 mm).
   Hold the feed cam with a screw key and turn the handwheel either direction until the guide lines on the lower shaft and feed cam are aligned.

4. Tighten the screws (a).

Next, check the timing of the up-down movements.

5. Turn the handwheel toward you until the needle comes to its lowest position.
   At this time, the guide-line on the feed rock cam should be coming to its lowest point. (fig. 6-2)

If not, adjust as follows:

6. Remove the base.
   Loosen the two screws (b) on the belt pulley with a hexagon socket screw key (2 mm). (fig. 6-3)

7. Turn the lower shaft so that the guide line comes to its lowest point.
   At this point, hold the lower shaft with a pair of pincers not to retate and turn the handwheel until the needle comes to its lowest position.

8. Tighten the two screws (b).

9. When you have adjusted the timing of up-down movement, check the timing of hook again. (sec. 3)

fig. 6-1

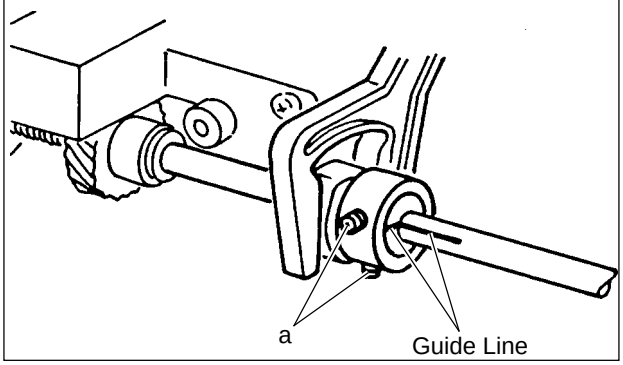

fig. 6-2

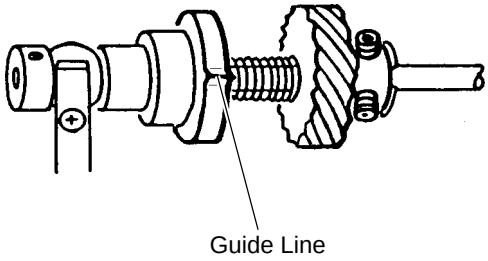

fig. 6-3

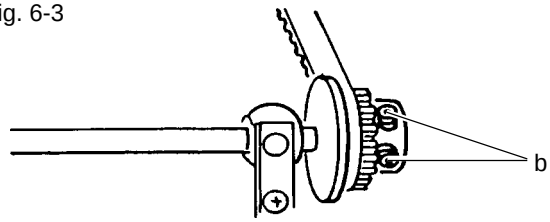

7. ADJUSTING THE FORWARD AND REVERSE STITCH

When stretch stitch sewing, the lengths of the forward and reverse stitches should be the same. check as follows:

1. Set the forward-reverse adjusting knob to the center "-" mark.

2. Turn on the power switch with pressing the both of stitch legth button (+ & -).
   Machine will select the pattern to check the stretch stitch. (fig. 7-1)
   Attach the regular foot and set a sheet of paper under the foot. Set the speed control button to maximum.
   Start the machine and check the hole on the paper.

If the hole (A) and (B) are not at one, adjust as follows. (fig. 7-2)

3. Tilt the machine backward and remove the base.

4. The forward-reverse sitich length is adjusted by turning the screw (d). (fig. 7-3)
   - If the forward stitch is finer than the reverse stitch, turn the screw to the right. (fig.7-2-b)
   - If the reverse stitch is finer than the forward stitch, turn the screw to the left. (fig. 7-2-c)

NOTE: Do not loosen the nut out of the screw.

fig. 7-1

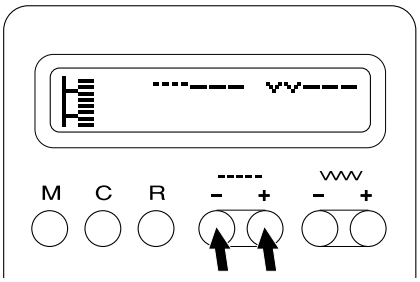

fig. 7-2

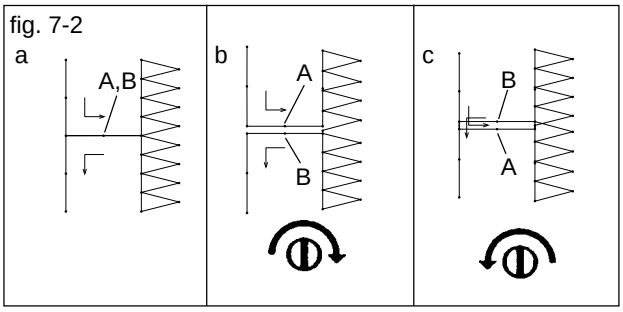

fig. 7-3

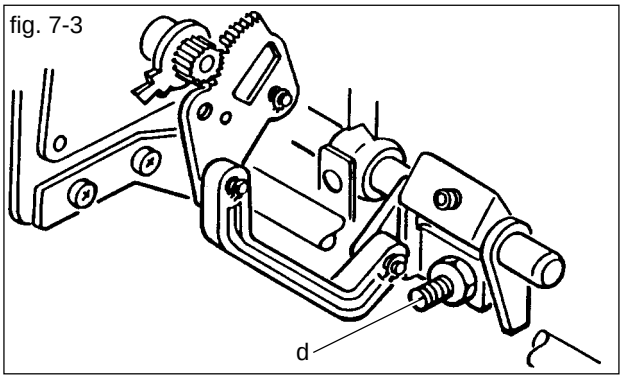

8. BOBBIN WINDER

If bobbin winds unevenly, adjust as follows:

1. Remove the cap on backside of arm.

2. Loosen (not remove) the screw which is holding the bobbin winder. (fig. 8-1)
   - If bobbin winds as shown on fig. 8-2, tilt the bobbin winder slightly to the left.
   - If bobbin winds as shown on fig. 8-3, tilt the bobbin winder slightly to the right.

3. Tighten the screw securely and re-set the cap.

If the bobbin thread is wound too little or too much, adjust as follows.

4. Loosen the center screw of bobbin winder stop. (fig. 8-4)
   - If the bobbin thread is wound too little, turn the bobbin winder stop slightly counter-clockwise.
   - If the bobbin thread is wound too much, turn the bobbin winder stop slightly clockwise.

5. Tighten the screw.

fig. 8-1

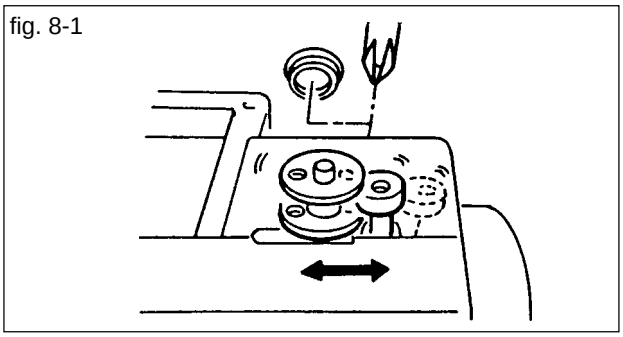

fig. 8-2

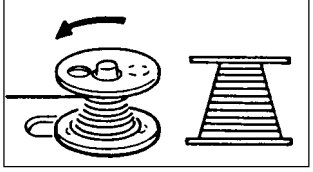

fig. 8-3

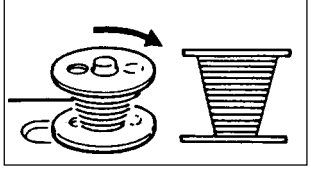

fig. 8-4

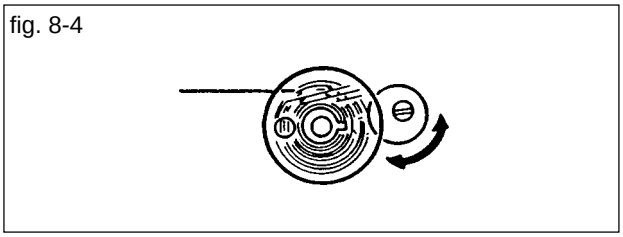

9. HEIGHT AND DIRECTION OF PRESSER FOOT

The height of the presser foot from the needle plate should be 5.5 mm when it is lifted up. (fig. 9)
The presser foot should be facing frontward (the edge of foot is parallel with the feed dog slot on needle plate).
If adjustment is needed, follow these procedures:

1. Remove the light cover.

2. Raise the presser foot lifter.

3. Loosen the screw (a).
   Adjust the height and direction of presser foot.

4. Tighten the screw (a).

5. Check if the presser foot lifter has a slight play in down position.

fig. 9

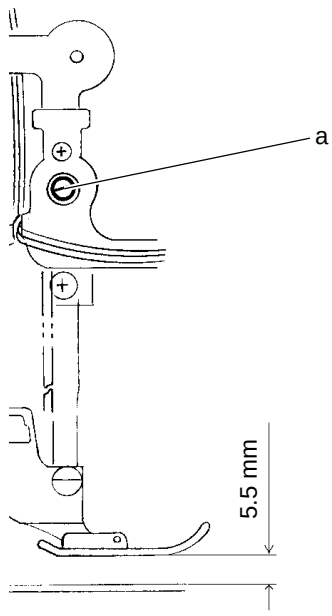

10. HEIGHT OF NEEDLE THREADER

If the height of needle threader is not correct, the hook on therader will not enter the needle eye. Adjsut as follows:

1. Remover the light cover.

2. Set the pattern number at “1” (straight stitch on left needle position).

3. Raise the needle to its highest point by turning the handwheel.

4. Loosen the screw on the needle threader bar stopper with a hexagon socket screw key (1.5 mm). (fig. 10-1)

5. Adjust the height of stopper so that the hook enter the needle eye.

6. Tighten the screw and check the height of needle threader again.

- If the hook has bent, change the threader hook assembly. To remove the hook assembly, pull it downward. (fig. 10-2)

fig. 10-1

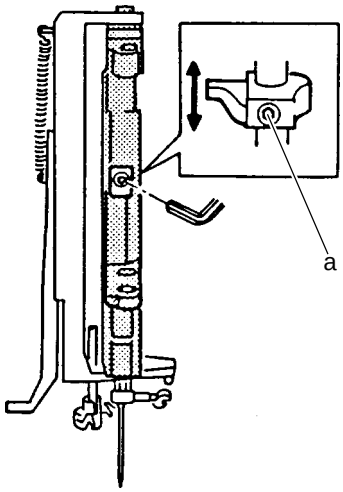

fig. 10-2

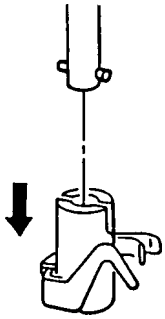

11. ZIGZAG TIMING • NEEDLE STOP POSITION

The zigzag timing and the needle stop position when start/stop switch is pressed are controlled by the computer system. However, the needle bar position (upper shaft revolution angle) is detected by the sensor slit.
Therefore, if the slit is not correct position, the timing and stop position will be incorrect. Adjust as follows:

1. Remove the front cover.

2. Loosen the screw (a) on the timing slit with a hexagon socket screw key (1.5 mm). (fig. 11)
   Align the guide-lines on the upper shaft and left side of slit.
   At this adjustment, do not move the slit side-ways.

3. Tighten the screw (a).

fig. 11 View from lowerside

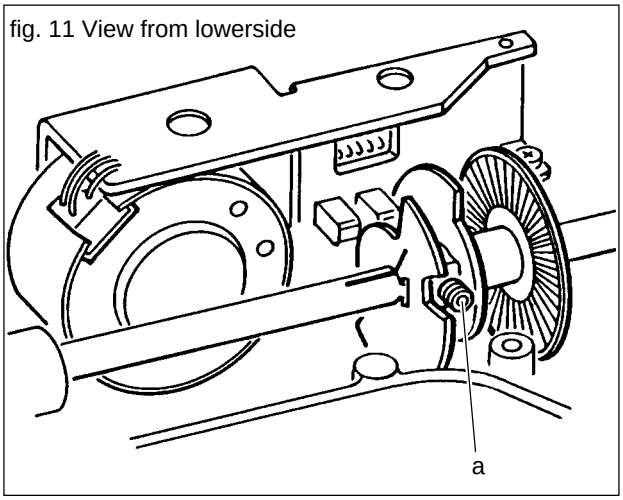

12. MOTOR BELT TENSION

If the motor belt tension is too tight or too loose, machine will not run smoothly.
Adjust as follows:

1. Remove the front cover.

2. Loosen the screw (a). (fig. 12)

3. Push the pulley towards the belt so that the belt should have flexibility of 5-6 mm when average pressure is applied on its side.

4. Tighten the screw (a).

fig. 12

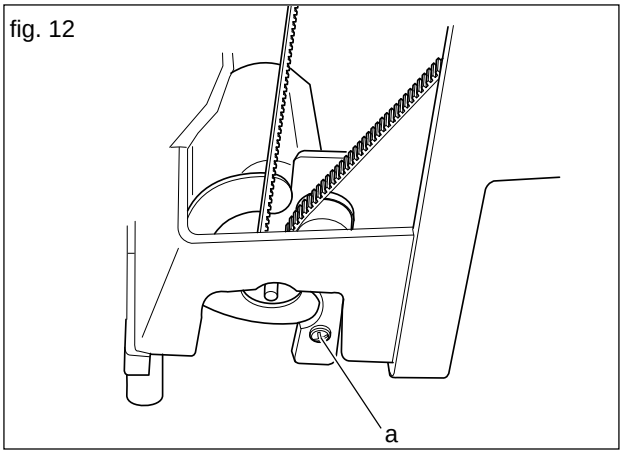

13. TIMING BELT TENSION

If the timing belt is too tight or too loose, the machine will run heavily or the timing of hook and feed motion will be changed incorrectly.
Adjust as follows:

1. Remove the front cover.

2. Loosen the screw (a). (fig. 13)

3. Push the pulley towards the belt and tighten screw. The belt tension should have a flexibility of 4-5 mm when average pressure is applied to its side.

When you have adjusted the timing belt tension, recheck the timing of the feed motion (sec. 6) and the timing of the hook (sec. 3) again.

fig. 13

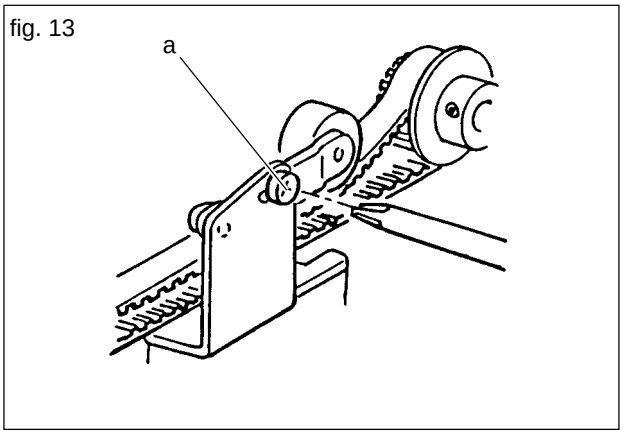

14. BACKLASH OF HOOK GEAR

If there is too much play on the hook gear on the turning direction, it may be the cause for machine not to sew properly and/or making excessive sewing noise.

1. Remove the needle plate and bobbin holder.

2. Tilt the machine backward and remove the bed lid by removing the screw and sliding it to the left. (fig. 3-2)

3. Loosen the 3 screws (a) and move hook base (b) up or down. (fig. 14-1)

4. Re-tighten the screws (a) tentatively and check follows.

- Free play at the tip of hook may be 0-0.5 mm. (fig. 14-2)
- Attach the needle plate and check that the feed dog does not touch the needle plate.

  If touching, rotate the base (b) slightly.

5. Tighten the screws (a) securely.

When you have adjusted the backlash of hook gear, check the timing of the hook again. (sec. 3)

fig. 14-1

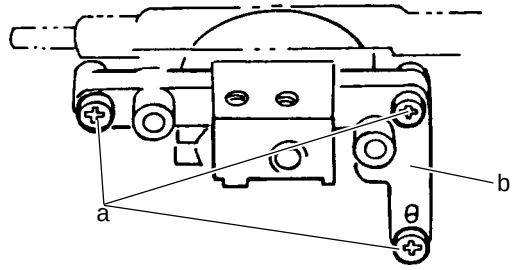

fig. 14-2

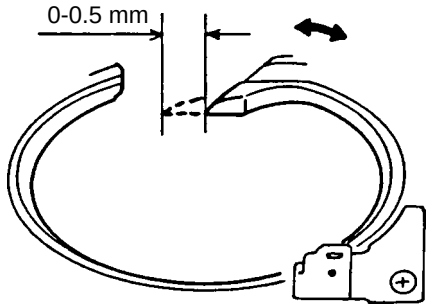

15. UPPER THREAD TENSION UNIT

The upper thread tension regulator unit has been adjusted to the best sewing conditions at the position “4”. However, if you wish to change this, do it as follows.

1. Remove the light cover.

2. Adjust the tension by turning the tension regulator screw (a) that is located on the side of the machine either to the left or right. (fig. 15)

   For a stronger tension, turn screw towards the right and for a weaker tension, turn screw to the left.

fig. 15

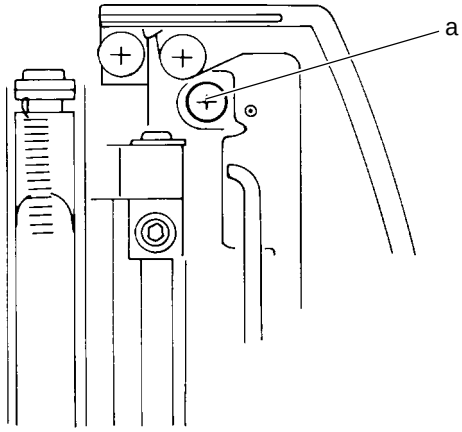

16. ADJUSTING THE LOWER THREAD TENSION

The bobbin thread tension is correctly adjusted at the factory and normally it would not be necessary for you to make adjustments yourself. If adjustments are necessary, to obtain a weaker bobbin thread tension, turn the screw (a) which is located on the front part of bobbin case counter clockwise, and for a stronger tension, turn screw clockwise. (fig. 16)

fig. 16

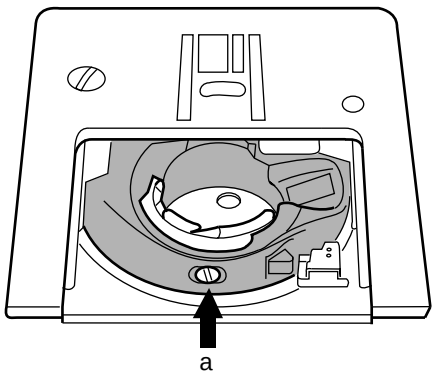

LOCATING THE DEFFECTED ELECTRICAL PART

The self-diagnostic program

This machine is provided with the self-diagnostic program for electrical parts.
If the machine does not function normally, although the mechanical setting has been completed, check the electrical parts by this program.

TO RUN THE SELF-DIAGNOSTIC PROGRAM

1. Trun off the power switch.

2. With pressing the both stitch length and width “+” button, turn on the power switch. (fig. I)

3. When this program has started correctly, the LCD will indicate the machine icon and version number of this program. (fig. I)
   When buttons are released, the LCD will change to indicate the Frequency of power line. (fig. II-a)

4. By pressing any button, the mode of this program will change and repeat as follow steps. (fig. II)
   a. Frequency of power line.
   b. Condition of switches and sesors
   c. Phase of feed pulse motor
   d. Phase of zigzag pulse motor
   e. Condition of foot controller and speed control lever

5. To quit this program, turn off the power switch.

fig. I

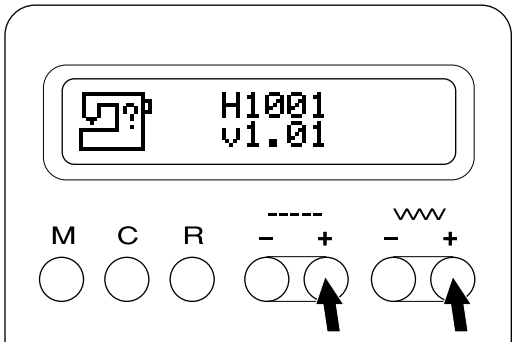

fig. II

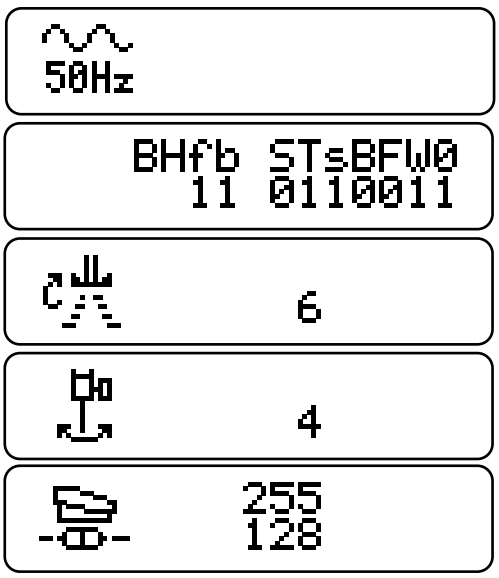

HOW TO CHECK

a. Frequency of power line

The frequency of connected power line will be indicated. (50 or 60 Hz)

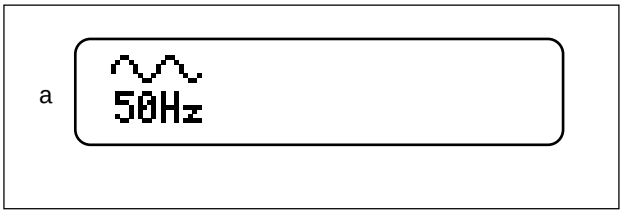

b. Condition of switches and sensors

The condition of each switch and sensor is indicated as follows.

BH f: Buttonhole lever switch -Front
1=Neutral 0=Lever is pushed.
BH b: Buttonhole lever switch -Back
1=Neutral 0=Lever is pulled.
Lower the buttonhole lever and check these switches by pushing or pulling this lever.
Also, using this mode, you can adjust the buttonhole lever position. See next page “b-1 Adjustments for buttonhole lever position”.

S: Stop sensor 1=not intercepted 0=intercepted
T: Timing sensor 1=not intercepted 0=intercepted
s: Speed sensor 1=not intercepted 0=intercepted
These sensors are intercepted by the slit plates on the main shaft.
Stop sensor = Stop slit, Timing sensor = Timing slit, Speed sensor = Speed slit
Turn the handwheel and check the response of each sensor.

B: Sensor of needle bar position
1=not intercepted 0=intercepted (left needle position)
This sensor is intercepted by the lever of gear on the zigzag pulse motor shaft.
Move the needle bar right or left and check the response of this sensor.

F: Feed sensor
1=not intercepted 0=intercepted (feed dog is coming most frontward)
This sensor is intercepted by the lever of gear on the feed pulse motor shaft.
Remove the base and turn this pulley to check the response of this sensor.

W: Bobbin winder switch
1=Bobbin winder spindle is in right position
0=Spindle is left position
Move the bobbin winder spindle left or right and check this switch.

O: Presser foot switch
1=Presser foot is lowered, 0=Presser foot is lifted

Lower or lift the presser foot lifter and check the response of this switch.

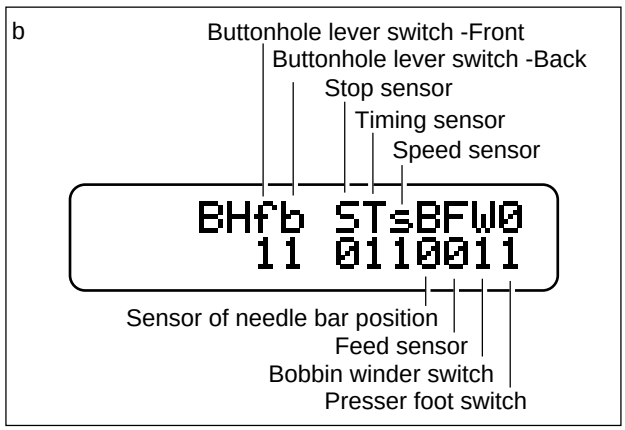

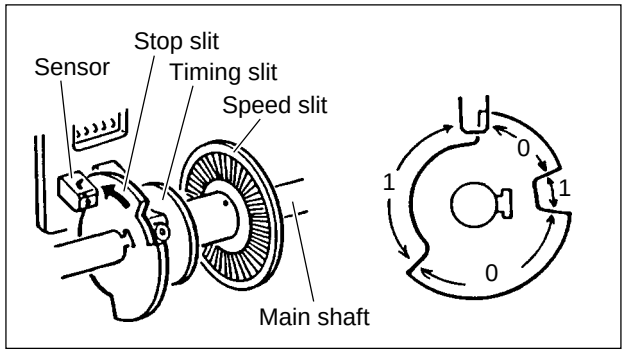

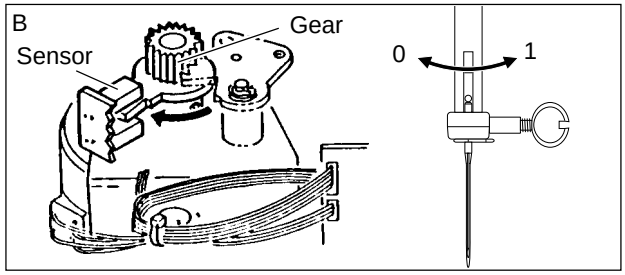

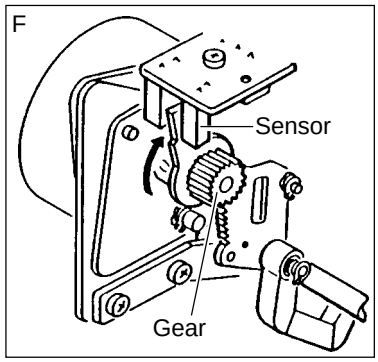

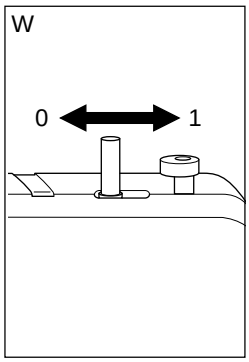

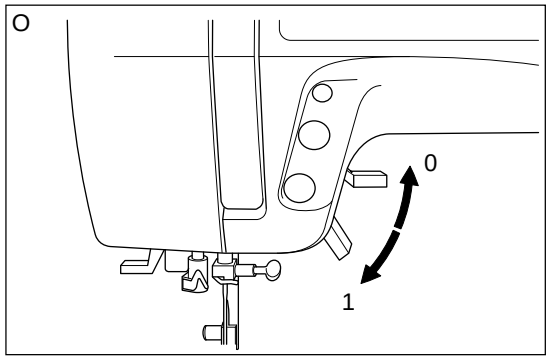

b-1. Adjustment for buttonhole lever position

If the machine does not sew even with the buttonhole lever all the way down, it means that the buttonhole lever is not positioned properly. Also, if the buttonhole lever is not positioned properly, the machine will sew buttonhole as fig. b-1a.

1. Run the self-diagnostic program and set the mode to check the condition of switches and sesors.

2. Attach the buttonhole foot.

3. Lower the presser foot and the buttonhole lever.

4. Pull the presser foot frame towards you about 1 cm while lifting the presser foot lifter slightly. Then slowly move frame back again. Lower the lifter when BH f changes to 0.

5. At this time, the presser foot frame should be about 1 mm forward from the extreme end.

If it is not correct position, adjust as follows:

6. Pull the presser foot frame 1 mm forward from the extreme end, and lower the presser foot.

7. Remove the light cover.

8. Loosen the set screws (a, b). (fig b-1d)

9. Use the screw (a) as a pivot and pull the circuit board towards you.

10. Tighten screw (b) when BH f changes from 1 to 0 and while slowly pushing the circuit board backwards.

11. Tighten screw (a) and replace the light cover.

Re-check the buttonhole lever position when adjustments have been completed.

fig. b-1a

fig. b-1b

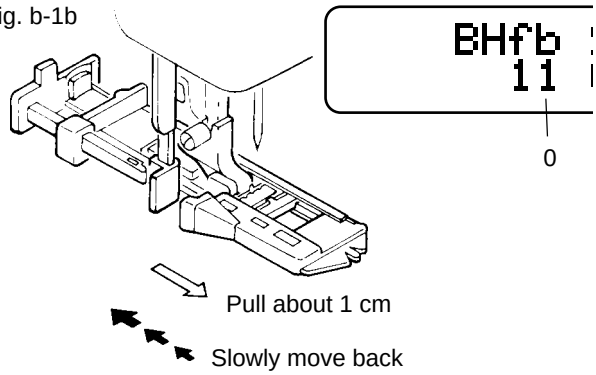

fig. b-1c

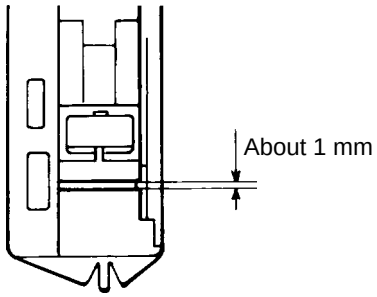

fig. b-1d

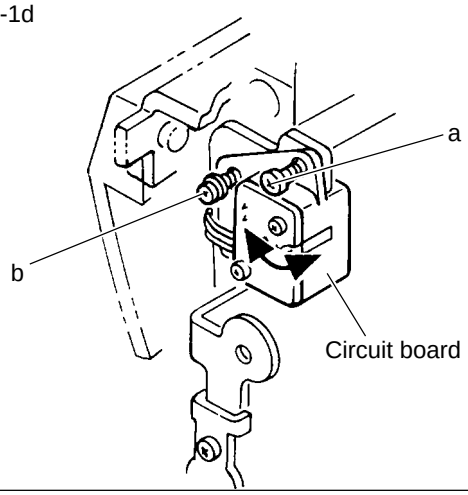

c. Phase of feed pulse motor

When you have selected this mode, feed pulse motor will move slightly and stop at the position which the lever of gear intercept the feed sensor.
Normally, the number 2 or 4 or 6 will appear on the LCD.
If it was not so, loosen the screw of gear and rotate it slightly. Re-tighten the screw and check the phase again.

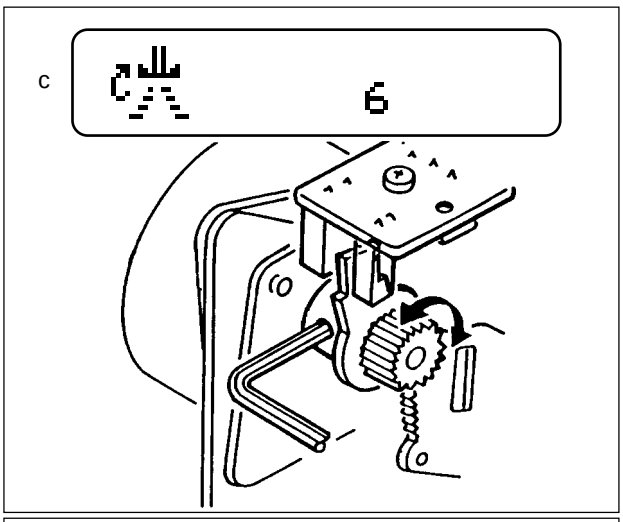

d. Phase of zigzag pulse motor

When you have selected this mode, zigzag pulse motor will move slightly and stop at the position which the lever of gear intercept the needle bar sensor.
Normally, the number 2 or 4 or 6 will appear on the LCD.
If it is not so, loosen the screw of pulley and rotate it slightly. Re-tighten the screw and check the phase again.

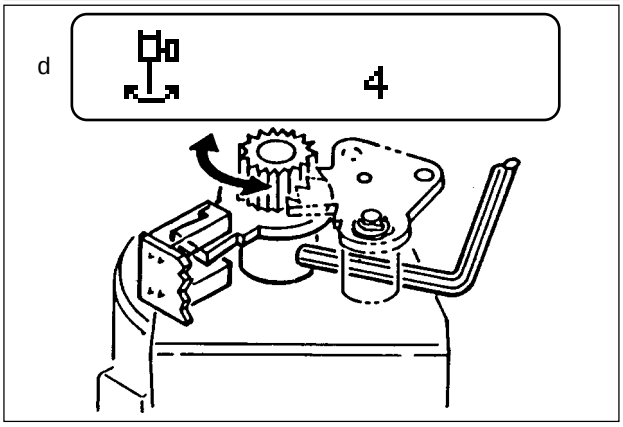

e. Condition of foot controller and speed control lever

The condition of foot controller is indicated on the first line of LCD.
Foot controller is not connected : the number 255 will appear.
Connect the foot controller: the number will change to 74.
Press the pedal of controller: the number will decrease according to the pressure on the pedal. When pressed maximam, the number 0 will be indicated.
The condition of speed cotrol lever is indicated on the lower line of LCD.
The number will change from 0 to 255 by sliding the lever to the right.

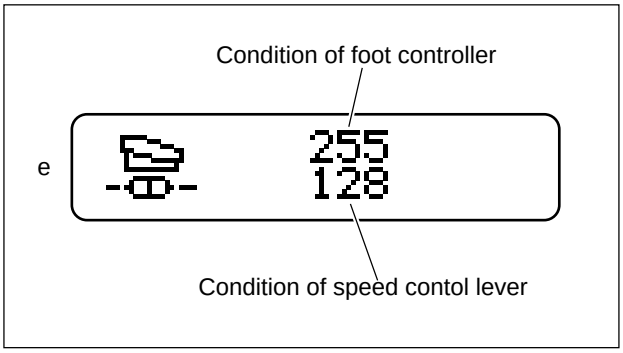

WARNING MESSAGES ON LCD

When you turn on the power, if control buttons are not released original position, machine will indicate the warning message on the LCD.

a. Start/stop button is not released.
b. Reverse button is not released.
c. Needle up/down button is not released.

Check each button and switch which is located inside of each button.

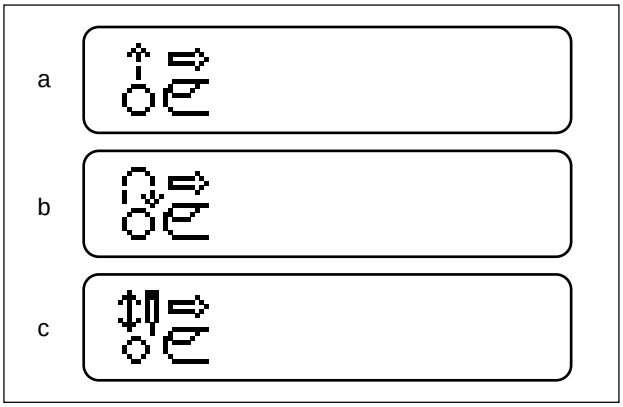

TROUBLE SHOOTING OF ELECTRICAL PARTS

Needle does not stop at up position
- Check the Stop sensor by Self diagnostic program
  - OK → Exchange the CPU circuit board
  - NG → Exchange the STS sensor board

Machine stops after a few stitches
- Check the Timing sensor by Self diagnostic program
  - OK → Exchange the CPU circuit board
  - NG → Exchange the ST sensor board

Machine runs high speed
- Check the Timing sensor by Self diagnostic program
  - OK → Exchange the CPU circuit board
  - NG → Exchange the Speed sensor board

Warning is appeared
- Check the Feed sensor by Self diagnostic program
  - OK → Check the Fuse on the CPU circuit board
    - OK → Exchange the Feed pulse motor
    - NG → Exchange the fuse
  - NG → Exchange the Feed Sensor board

Warning is appeared
- Check the Zigzag sensor by Self diagnostic program
  - OK → Check the Fuse on the CPU circuit board
    - OK → Exchange the Zigazg pulse motor
    - NG → Exchange the fuse
  - NG → Exchange the Zigzag sensor board

Machine will start although the presser foot is lifted
- Check the Presser foot switch by Self diagnostic program
  - OK → Exchange the CPU circuit board
  - NG → Exchange the Presser foot switch

Bobbin wind icon is appeared although the Bobbin winder spindle is pushed to the left.
- Check the Bobbin winder switch by Self diagnostic program
  - OK → Exchange the CPU circuit board
  - NG → Exchange the Bobbin winder switch

At buttonhole sewing, machine will not start.
- Check the Buttonhole lever switch by Self diognostic program
  - OK → Exchange the CPU circuit board
  - NG → Exchange the Buttonhole lever switch

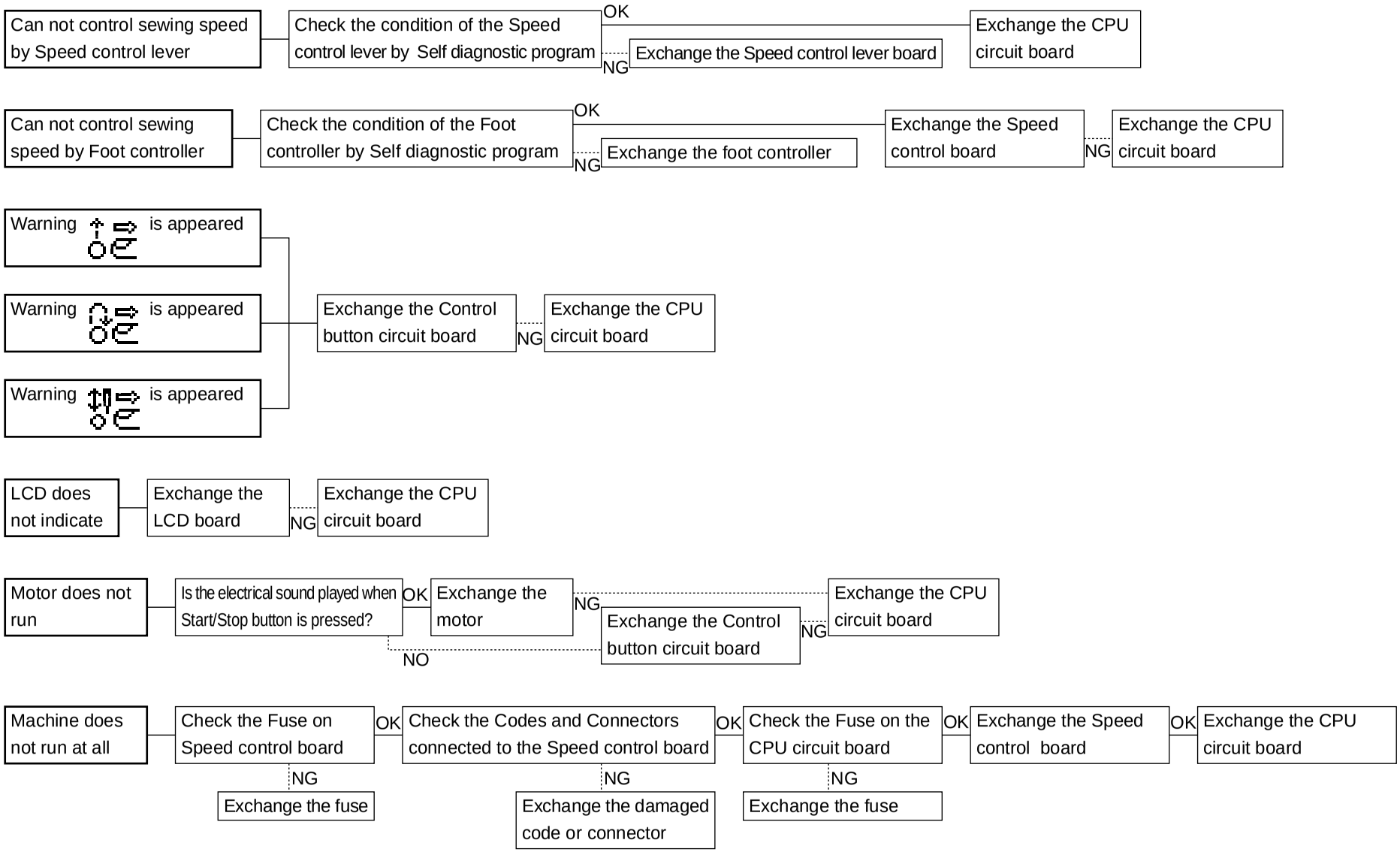
Can not control sewing speed by Speed control lever
Check the condition of the Speed control lever by Self diagnostic program
OK
NG
Exchange the Speed control lever board
Exchange the CPU circuit board
Can not control sewing speed by Foot controller
Check the condition of the Foot controller by Self diagnostic program
OK
NG
Exchange the foot controller
Exchange the Speed control board
NG
Exchange the CPU circuit board
Warning is appeared
Warning is appeared
Warning is appeared
Exchange the Control button circuit board
NG
Exchange the CPU circuit board
LCD does not indicate
Exchange the LCD board
NG
Exchange the CPU circuit board
Motor does not run
Is the electrical sound played when Start/Stop button is pressed?
OK
NO
Exchange the motor
NG
Exchange the Control button circuit board
NG
Exchange the CPU circuit board
Machine does not run at all
Check the Fuse on Speed control board
OK
NG
Exchange the fuse
Check the Codes and Connectors connected to the Speed control board
OK
NG
Exchange the damaged code or connector
Check the Fuse on the CPU circuit board
OK
NG
Exchange the fuse
Exchange the Speed control board
OK
Exchange the CPU circuit board